Service Manual

TURBO DELI ROTISSERIE S WALMART

MODELS

TDR 7 S
TDR 7 + 7 S

TDR 7 S **TDR 7 + 7 S**

- NOTICE -

This manual is prepared for the use of trained Service Technicians and should not be used by those not properly qualified. If you have attended a training for this product, you may be qualified to perform all the procedures in this manual.

This manual is not intended to be all encompassing. If you have not attended a training for this product, you should read, in its entirety, the repair procedure you wish to perform to determine if you have the necessary tools, instruments and skills required to perform the procedure. Procedures for which you do not have the necessary tools, instruments and skills should be performed by a trained technician.

Reproduction or other use of this Manual, without the express written consent of Fri-Jado, is prohibited.

Versions		
Version	Issue date yyyy-mm-dd	Remarks
8/2024	2024-08-12	First release
9/2024	2024-08-16	Small corrections
9.1/2024	2024-08-20	Update in exploded views

TABLE OF CONTENTS

This manual covers the TDR-S electric oven models. All of the information, illustrations and specifications contained in this manual are based on the latest product information available at the time of publishing.

TECHNICAL DATA

American Models		**TDR 7 S**	**TDR 7 + 7 S**
Dimensions			
-	Width	39 ¼ inch	39 ¼ inch
-	Depth	32 ¾ inch	32 ¾ inch
-	Height	41 ¼ inch	82 ⅝ inch
Weight			
-	Gross	463 lbs	937 lbs
-	Net	408 lbs	827 lbs
Maximum ambient temperature	95 °F	95 °F	95 °F
Sound pressure	< 70 dB(A)	< 70 dB(A)	< 70 dB(A)
Electrical installation	Frequency	50/60 Hz	50/60 Hz
-	Required power	10.5 kW	2× 10.5 kW
Length of power cable approx.		75 inch	75 inch (2×)
Delivery connection	Voltage	3~ 208 V	3~ 208 V
-	Max. nom. current	30.8 A	2× 30.8 A
Plug		NEMA 15-50P	2× NEMA 15-50P
	Recommended breaker	40 A	2× 40 A
Single phase connection	Voltage	1~ 208 V	1~ 208 V
	Max. nom. current	51 A	2× 51 A
	Recommended breaker	60	2× 60 A

Tools
- Standard set of tools.
- Metric wrenches, sockets and hex socket key wrenches.
- Multi-meter and AC current clamp meter.
- Temperature tester.
- Insulation value tester (Megger).
- Field Service Grounding Kit.

ICONS AND SYMBOLS

- Language
- ON/OFF or stop program
- Recipes menu
- Home screen
- Help function
- Wipe/clean touch screen (locks screen for 60s.)
- Pause
- Extra time
- Continue
- Create recipe
- Edit recipe
- Confirm
- Step back
- Delete
- Tap screen
- Swipe up
- Swipe

SWITCHING ON

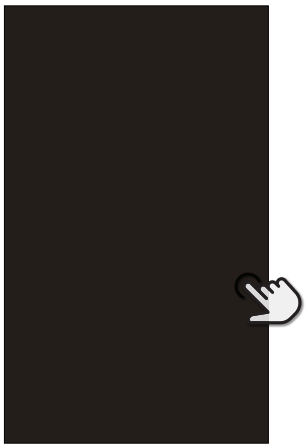

Tap the screen

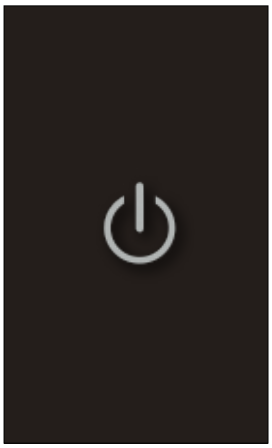

Tap the ON / OFF icon

Home screen

MENU OVERVIEW

Swipe up from the bottom edge of the screen

- Recipes menu
- Messages (under construction)
- Manager and service settings
- Log & maintenance menu
- Help menu (under construction)
- Clean screen. Locks the touch screen for 30 seconds.
- About. Gives information about soft- and hardware.
- Screenshot. Only available with a wifi connection.

ACCESSING THE MANAGER AND SERVICE SETTINGS

The manager pin code can be chosen freely, 0000 for free access.

The default service pin code is 4878.

Once the service menu is entered, also the manager menu is unlocked.

Once the manager or service menu is opened, it stays unlocked for 30 minutes or until the device is switched off and on again.

See parameter lists at the end of this chapter.

RUNNING A COOKING PROGRAM

Push recipes icon

Choose program

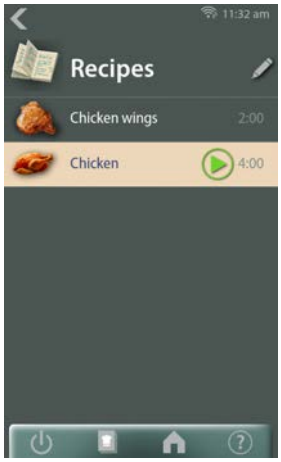

Start program

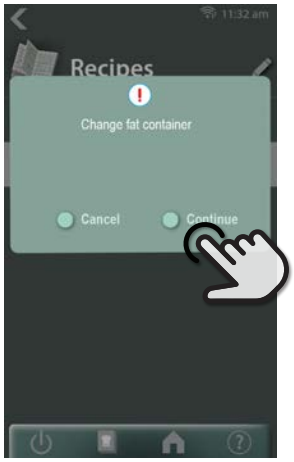

Check fat container and push "continue"

The following 4 steps are applicable if the cooking program has a pre-heat step.

Preheat starts.
Actual temperature shown.

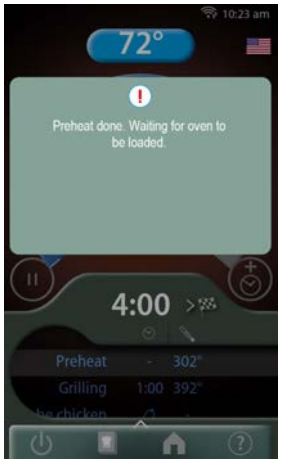

Preheat done,
open the door.

Load products and close the door. Tap rotate icon to rotate rotor.

Push ▶ to continue.

Program running.
Push to see actual temperature for 5 seconds.
⏸ = Pause button

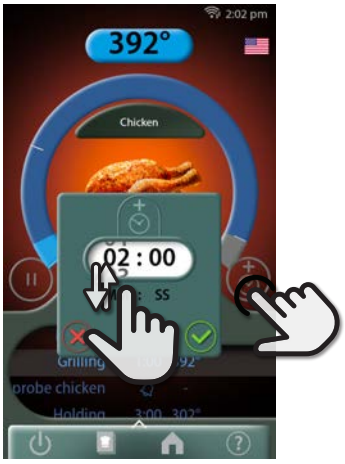

A signal sounds after each step. Tap "boost" icon for extra time.
Swipe to change time.

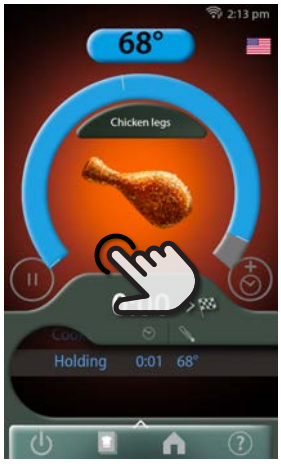

Program in holding step, if applicable. Tap the screen to stop the sound

End of program when no holding is programmed.

CREATING A COOKING PROGRAM

Push recipes icon

Push icon

Other name if applicable

Choose product icon and fill in recipe name.
Choose or change step name if applicable.
Drag up for an extra cooking step.

Push time or temperature and adjust.

Push when ready

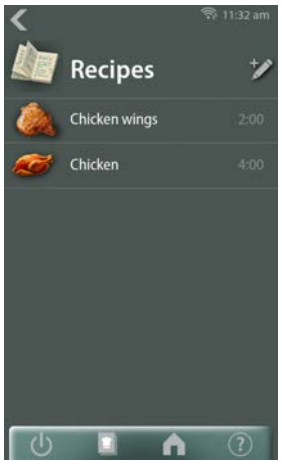

EDITING A COOKING PROGRAM

Push recipes icon

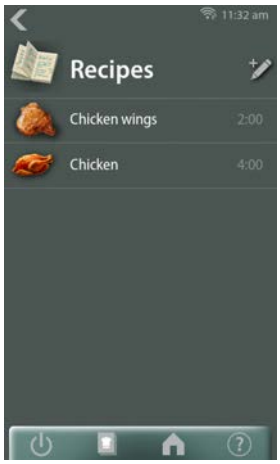

Choose program

Push icon to edit the highlighted recipe.
Now follow the steps as described above.

EXAMPLE OF ERROR MESSAGE

Example motor failure during cooking.

In the "log" menu the error can be found

Select the error

Meta data is shown

Go to the manager menu to clear the error.

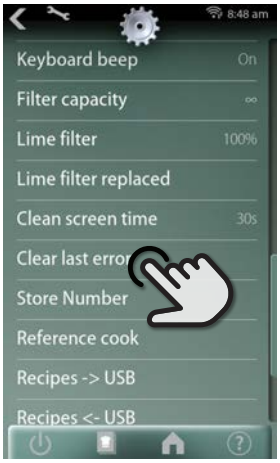

In manager menu:
Scroll to "Clear last error" and tap.

AUDIO VOLUME AND SOUND SETTING

In manager menu:

Scroll to "Audio" and push ▶

4 options.

With "Test audio" the chosen volume or sound can be checked.

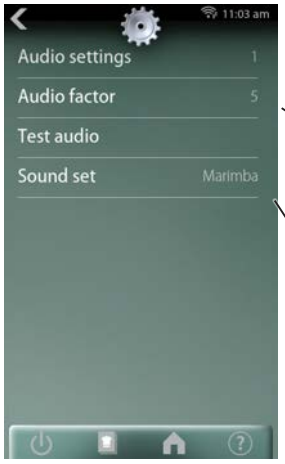

This is no setting.

Different sounds can be heard in combination with "Test audio".

Volume

Sound choice (Beeper has highest volume)

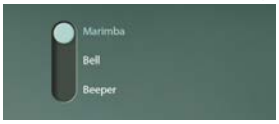

I/O TEST

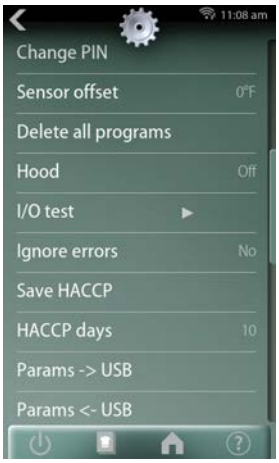

In the service menu, select "I/O test"

Reading	°F
0	32
500	122
670	152
1000	212
1500	302
1750	347
2000	392
2200	428

"Analog input" shows PT1000 temperature (in 0.1 degrees)
Here the temperature is 67°C, (which is 152°F), see table.

"Digital inputs" is showing the available inputs and also which contacts are closed.

J13 shows that the door is closed.

J14 shows an open thermistor in the blower, causing a blower error.

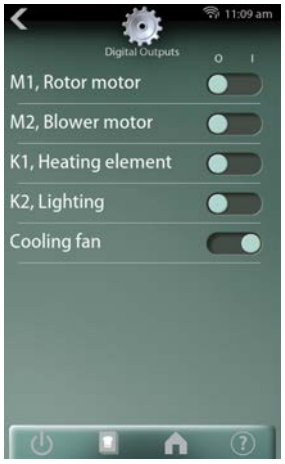

"Digital outputs" is showing the available outputs and also which are activated.

Push the button to activate or disactivate the output of your choice.

EXCHANGING DATA WITH THE USB DRIVE

Go to the manager menu to find these settings

Copies recipes from the controller to the USB drive

Copies recipes from the USB drive to the controller. The existing recipes will be overwritten.

Copies recipes from the USB drive to the controller. The recipes will be added to the current recipes.

Go to the service menu to find these settings

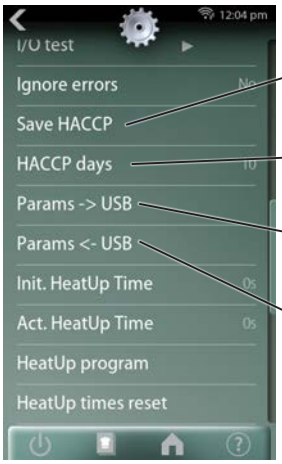

Copies HACCP files to the USB drive. See also HACCP days setting.

Set number of days of HACCP files to be copied to the USB drive (here 10 days).

Copies the parameter list from the controller to the USB drive.

Copies the parameter list from the USB drive to the controller. The current parameters will be overwritten.

UPDATING SOFTWARE TDR S

Prepare the software (firmware)

The software comes in a .zip file.
The name corresponds with the version of the software. For example:
"S-software-V1.0.69-setting-files.zip"

1. Extract the zip file
   In Windows File Explorer, right-click and choose "Extract All…"
2. Copy the folder "42-S_CPU.1" to the USB drive.

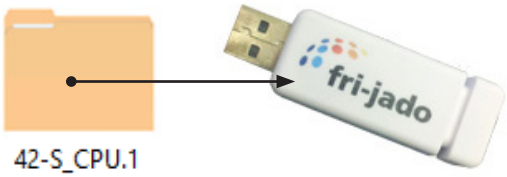

Update the software (firmware)

1. Disconnect the mains supply

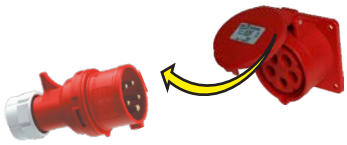

2. Connect the USB drive.

3. Connect the mains supply

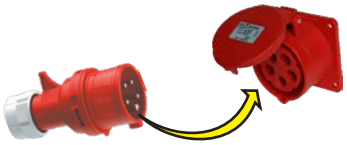

4. The following messages appear

   Bootloader version V4.03.06

   USB stick found
   starting upgrade

   Copying update.tar

   in progress .. %

   USB can be removed

   Removing current application

   Extracting archive .. %

   Please remove USB stick

5. Disconnect the USB drive and wait until the screen comes back.

Important first setting !!

In case a new board has just been put into a unit, it has to be set to the right device type! –> See 'First settings' on page 61.

AUTOMATIC COOK CORRECTION

The automatic cook correction facility will automatically add or deduct time to the programmed cooking time in order to have constant cooking quality.

To activate it, the parameter "auto correct" in the Service menu has to be set to "on".

Go to the manager menu –> Reference cook and activate it.

Then select a (new) program.

It is recommended to do that cook with a half to ¾ load.

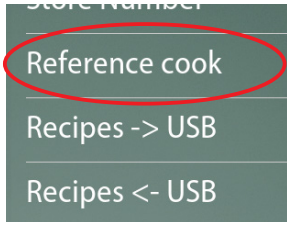

The program calculates the surface from the diagram below the curved line. (temperature × time). The result is the so called heat number. This heat number is stored into the cooking program.

All further cooking programs will try to get the same heat number.

The second diagram shows an example with full load. It takes more time for the unit to reach the programmed cooking temperature. See dashed line. The surface above the dashed line represents the missing part of the heat number. The cook correction will put this missing part behind the normal cooking time. Therefore extra time is added in order to reach the desired heat number.

It is also possible that time is deducted in case a smaller load has been put into the oven.

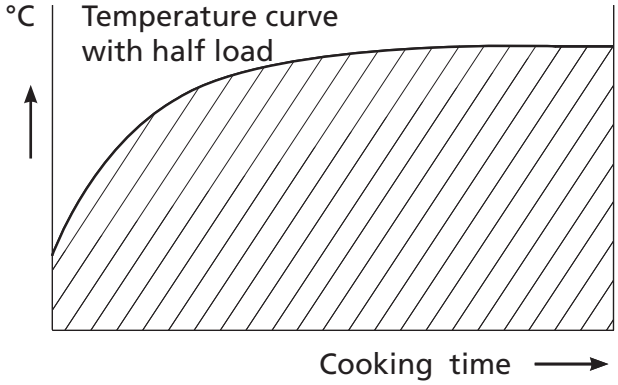

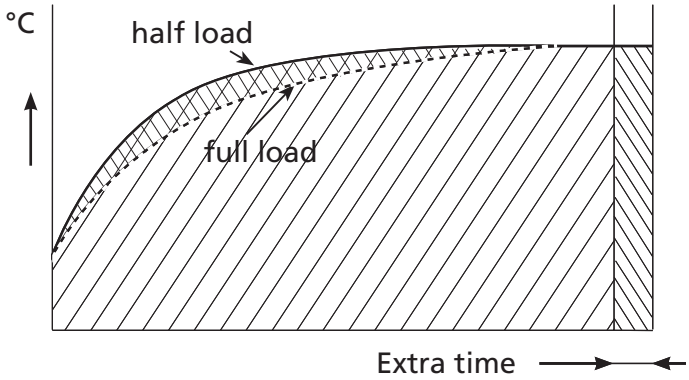

Time will be added in case of:

A bigger load.

A colder load. (straight from the freezer)

A lower mains voltage.

Somebody opened the door.

Time will be deducted in case of:

A smaller load.

A warmer load. (defrosted)

Higher mains voltage.

Note that:

In case the time or temperature will be changed in the cooking program, the heat number will be adapted with this amount.

The heat number is stored in the cooking program. In case such a program is copied, the heat number goes with it.

It is possible that in case the program has changed a lot, the cook correction is not able to perform well anymore. In that case the program has to be deleted and reprogrammed with the good parameters.

It is possible to disable this auto cook correction feature in the service parameters. See "parameter listings" –> "auto correct.

PARAMETERS & SOFTWARE

The latest parameter lists and software can be found on the Fri-Jado resource library.
Copy the link below in your browser or scan the QR code.

https://www.frijado.com/wp-content/uploads/2024/03/WM-TDR-S-software.zip

MANAGER PARAMETERS

These are the manager parameters available at the moment of publishing of this manual. Use the link or QR-code on the previous page to download the latest parameter overview from page 17.

Level 1	Level 2	Level 3	Default	Possibilities
Change Pin code				0000–9999
Toggle Light				on - off
Temperature unit			°F	°C - °F
Volume unit filter			gal	lit - gal
UTC time			Local time	
UTC Date			Actual date	
Timezone offset			0h	-12–12
Time format			AM/PM	24 hr - AM/PM
Date format			MDY	DMY - MDY
Start delay recipe			no	no - yes
Alarm signal			on	off - on
End-user recipe editing			no	no - yes
Ask weight			no	no - yes
Preheat mode			Continue	no - 1x - Continue
Preheat temp default			410°F	68–482°F (20–250°C)
Eco function			no	no - yes
Audio	Audio setting		1	1–11
	Audio factor		100	1–100
	Test audio			
	Sound set		Marimba	Marimba - Bell - Beeper
Keyboard beep			on	off - on
Filter capacity			∞	50–30000, or ∞
Lime filter				remaining capacity of lime filter
Lime filter replaced				no - yes
Clean screen time			30 sec	10–60 sec
Store Number				
Reference cook				
Recipes –> USB				
Recipes <– USB				
Add recipes <– USB				
Cloud settings	Cloud Username			
	Cloud Password			
Restart hard				

SERVICE PARAMETERS

These are the service parameters available at the moment of publishing of this manual. Use the link or QR-code on the previous page to download the latest parameter overview from page 17.

Level 1	Level 2	Level 3	Default	Possibilities
device type			TDR-7 S 208V	LDR-8 S AC gas, TDR-8 S, TDR-8 S AC, TDR-7 S AC 208V, TDR-5 S AC, TDR-5 S, LDR-8 S AC, TDR-5 S 208V, TDR-7 S 208V, LDR-8 S AC 208V, LDR-8 S AC gas 208V
smart temperature			off	off - on
auto-correct			on	off - on
Language			english	englisch - deutsch - francais - nederlands - espanol - japanese - danish - italiano - russian - norsk - polish
save errors				save error history on usb
Generate error				
clear error history				
Demo mode menu	Demo mode		off	off - on
auto off time			60 min	10–240
Change pin			****	read out of the manager pin code
Sensor offset			0°F	-55–55°F
Delete all programs				no - yes
Hood			off	off - on
I/O test				read the inputs and set the outputs
Ignore errors			no	no - yes
save HACCP log				save haccp log on usb
HACCP days			10	1–100
params –> USB				save parameters on usb
params <– USB				load parameters from usb
Initial heat up time				
Actual heat up time				
Heat up program				no - yes
Heat up time reset				no - yes
Wifi	Wifi smartphone		Allowed	blocked - allowed
	Wifi cloud		Enabled	disabled - enabled
	Wifi RSSI			
	Wifi auto restart		60	0–240
	start config			
	Allow open WLAN		Disabled	disabled - enabled
	reset Wifi chip			no - yes

Level 1	Level 2	Level 3	Default	Possibilities
Factory settings	Fact reset settings			no - yes
	Fact reset recipes			no - yes
	Fact reset data			no - yes
	Lights out		Disabled	disabled - enabled
	Eco variable		6	1–10
	Correction factor		3	1–10
	Fat drain		open	open - auto
	RS485 debugging		off	off - on
	PID factors	P	100	0–100
		I	5	0–100
		D	100	0–500
		iMax	100	10–300
		Relay actions	80	16–160
	S/N			
Commision reset				no - yes
Commission apply				no - yes
Customer ID			1	1–10
Restart soft				no - yes
Restart hard				no - yes
Swipe sensitivity			25	0–100
Live variables	Status counter			
	Output counters			
	Start/end counters			
	UTC system time			
	Commission time			
	Time lime filter			

WARNING: Disconnect the electrical power to the machine at the main circuit box. Place a tag on the circuit box indicating the circuit is being serviced.

ACCESS TO SERVICE PARTS

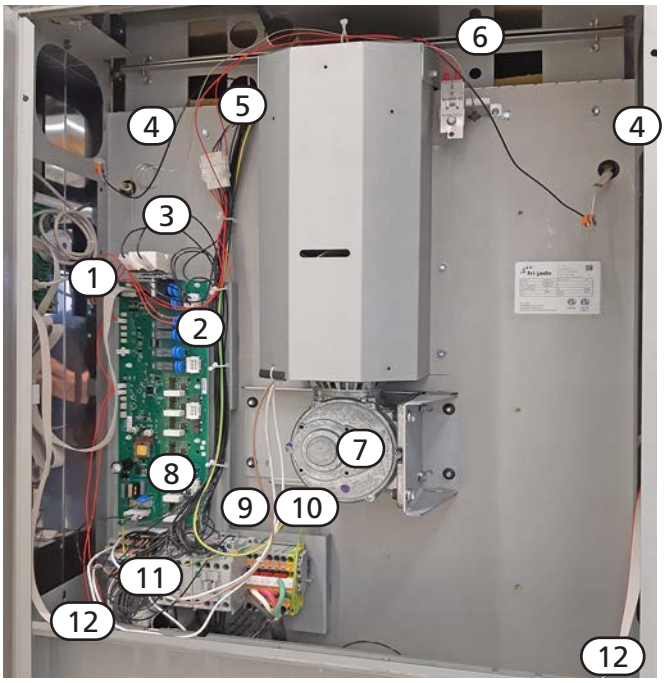

Side view

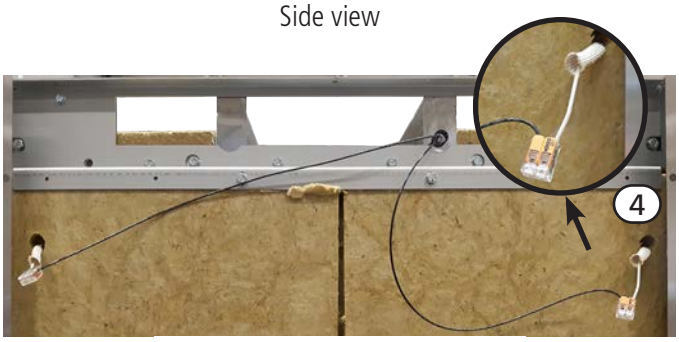

Opposite side view

Unscrew 4 screws and open the panel from the electric compartment .
Do the same for the panel on the opposite side to reach the wiring from the light and to “unlock” the top panel.
Remove the top panel and the blower panel on the inside, to reach the blower motor and the heating element.

1. CPU & touch panel
2. Power & I/O board.
3. Hi Limit thermostat
4. Lamp connection
5. Connector of blower
6. PT 1000 temperature sensor.
7. Rotor drive motor
8. Fuse on board (1A 5x20 slow acting).
9. Contactors (left = light, right = heating)
10. Mains connection block
11. Capacitors
12. Door switches and rotor switches
13. Blower motor
14. Connections of heating element.
15. Illumination
16. Heating element
17. Turbine
18. PT1000 sensor
19. Senor, high limit thermostat.

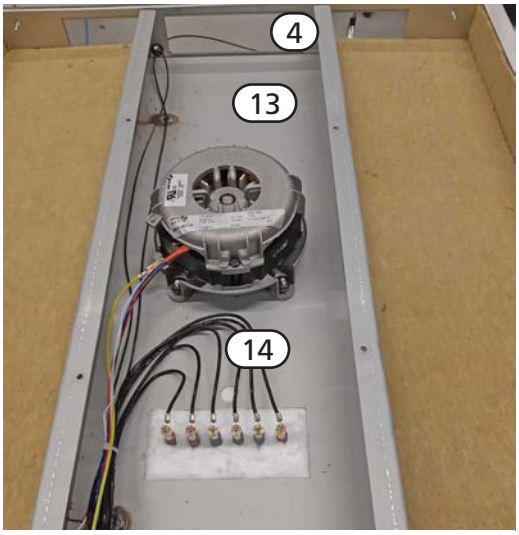

Top view

Inside view (with removed blower panel)

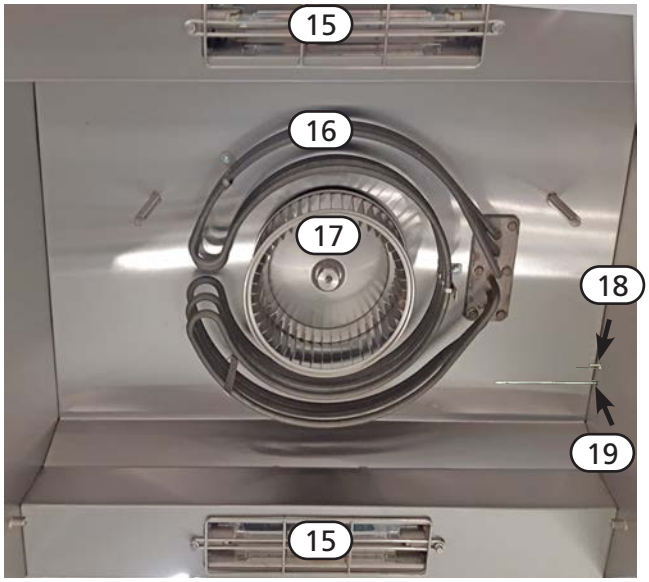

ACCESS TO SERVICE PARTS STACKED UNITS

Acces to the blower motor, heating element and light cover has to be gained through the bottom side of the upper unit.

Slide out the grease tray.
Unscrew two screws at the front side and slide out the grease guard.
Unscrew and remove the top plates of the lower unit.
It might be necessary to cut some silicon sealant.

OPERATING PANEL (GENERAL)

1. Remove the flatcables and ground wire from the CPU board on the backside.
2. Remove the bolt, nut and ring on the top-backside of the operating panel.
3. Pull out the panel and lift, to remove the panel.

DOOR SWITCH

1. Remove the operation panel and the right side panel.
2. Unscrew the two screws and remove the switch.
3. Disconnect the wiring.

Reverse the procedure to install.

Note: *The contact pin of the switch must run free through the chassis.*

ROTOR SWITCH

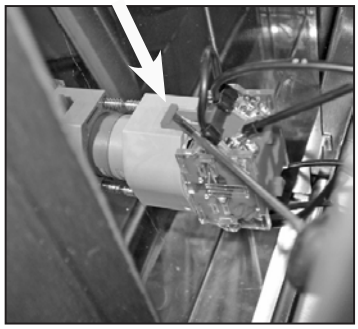

1. Remove the right side panel
2. Lift the locking tab with a screwdriver and remove the back part of the switch.
3. Loosen the two screws that secure the front part and remove this part by twisting it.
4. Disconnect the wiring.

Reverse the procedure to install.

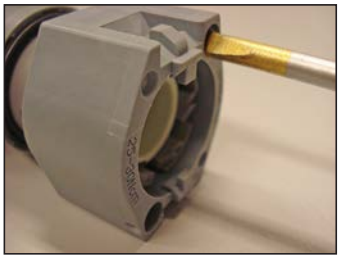

Note: *Make sure the back part is clicked-on on both sides.*

REPLACING A LAMP

Unscrew the bolts and remove the protection guard of the Halogen lamp.

Do not touch the glass of the lamp with your hands! Otherwise clean with alcohol

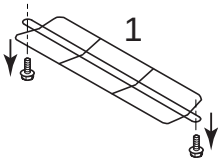

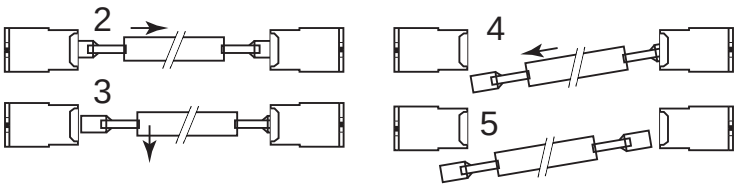

LAMP HOLDER

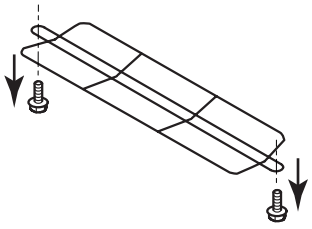

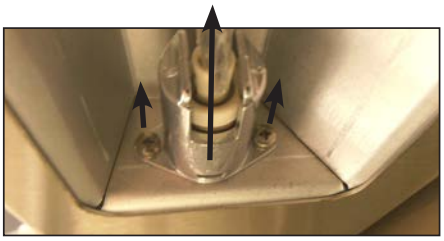

1. Remove both side panels from the rotisserie.
2. Disconnect the wiring on both sides.
3. Unscrew the bolts and remove the protection guard of the Halogen lamp.
4. Push the lamp to either side and pull it down to remove the lamp. (see above)
5. Unscrew the 2 M3 screws and remove the holders from the inside.

Reverse the procedure to install.

BLOWER MOTOR

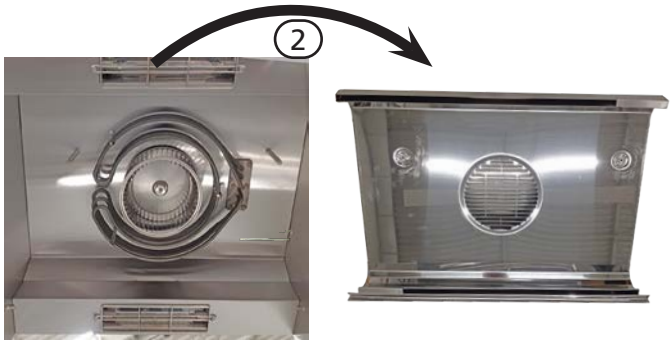

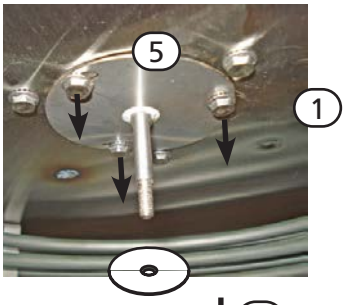

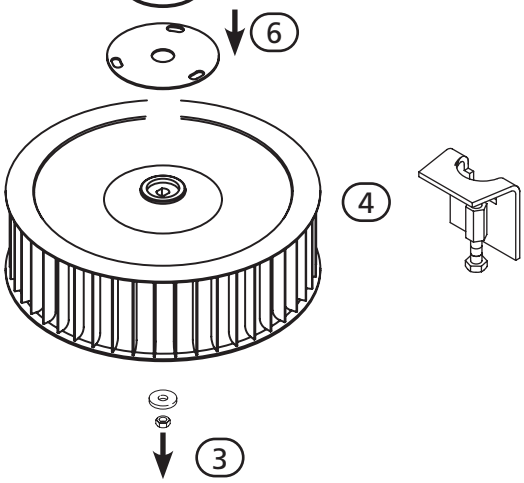

Removing the blower assembly.

1. Remove both side panels and the top panel
2. Remove the blower panel
3. Remove the M5 nut and washer from the motor shaft
4. Pull the turbine from the shaft. A puller is delivered with the new blower kit.
5. Unscrew 3 screws.
6. Pull off the shaft seal with pressure plate.
7. Disconnect the blower wiring.
8. Unscrew 4 nuts.
9. Take out the motor.

Installing the blower assembly.

This has to be done in reversed order from removal.

Very important!

- First mount the motor and tighten the 4 nuts thorougly.
- Then mount the shaft seal.
- Never loosen or tighten, the 4 nuts from the motor afterwards.
- If this is necessary, then first loosen the shaft seal.
- Check the rotation direction.

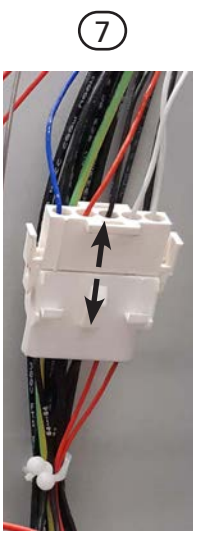

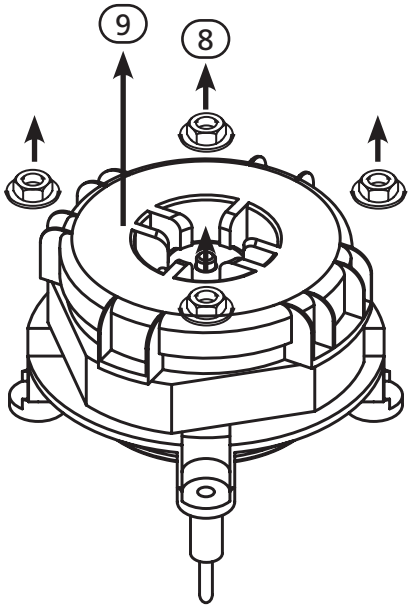

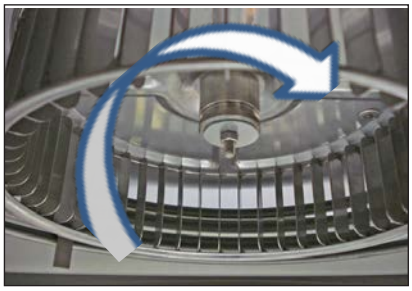

HEATING ELEMENT

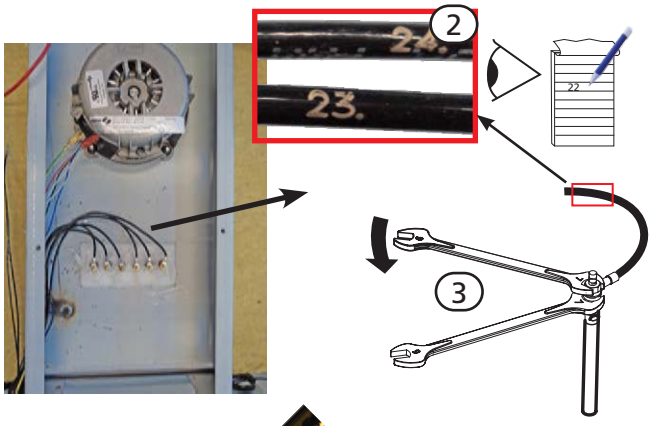

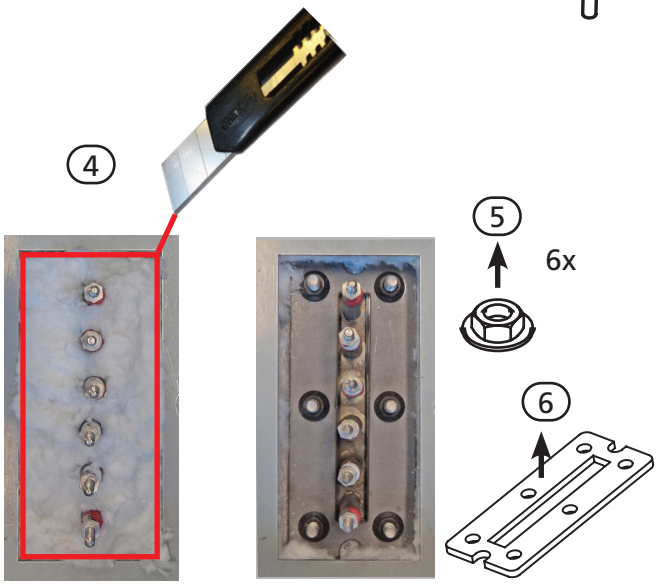

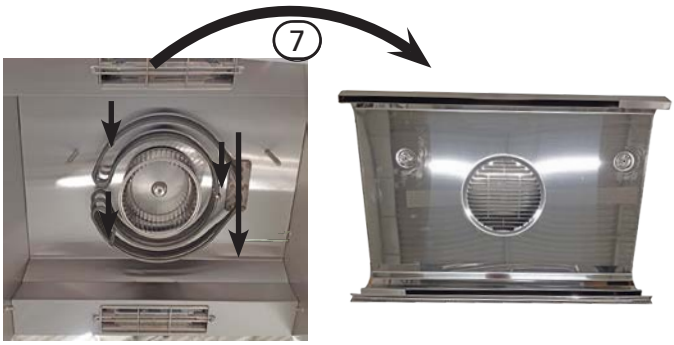

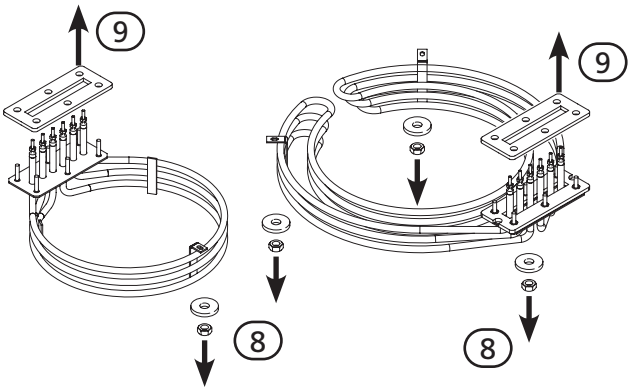

Removing the heating element.

1. Remove both side panels and the top panel.
2. Note the wiring numbers and write down if necessary.
3. Disconnect the wiring. Note! Hold the rear nut with an open end spanner!
4. Cut loose the insulation and take it out.
5. Unscrew 6 nuts M6.
6. Take out the pressure plate.
7. Remove the blower panel.
8. Unscrew the three M4 nuts that secure the heating element to the ceiling.
9. Remove the graphite gasket from heating element. Also clean the ceiling from residues.

Installing the heating element.

This has to be done in reversed order from disassembling.

Very important!

Take a new gasket.
Do not forget to hold the rear nut with an open end spanner when connecting the wiring and tightening the nuts.

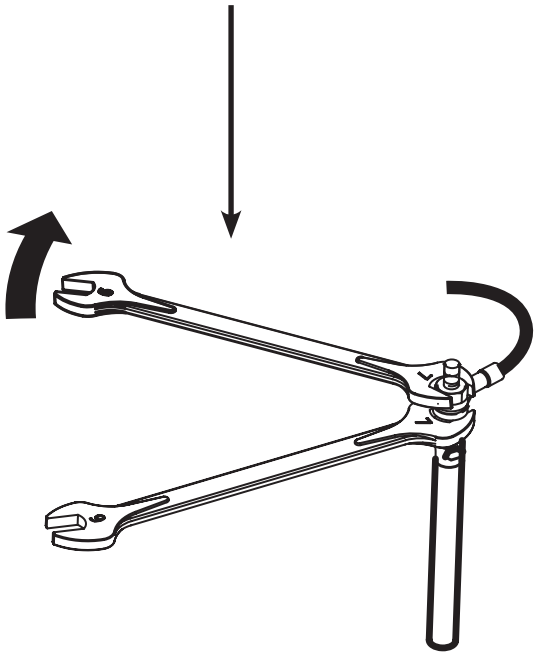

ROTOR DRIVE MOTOR

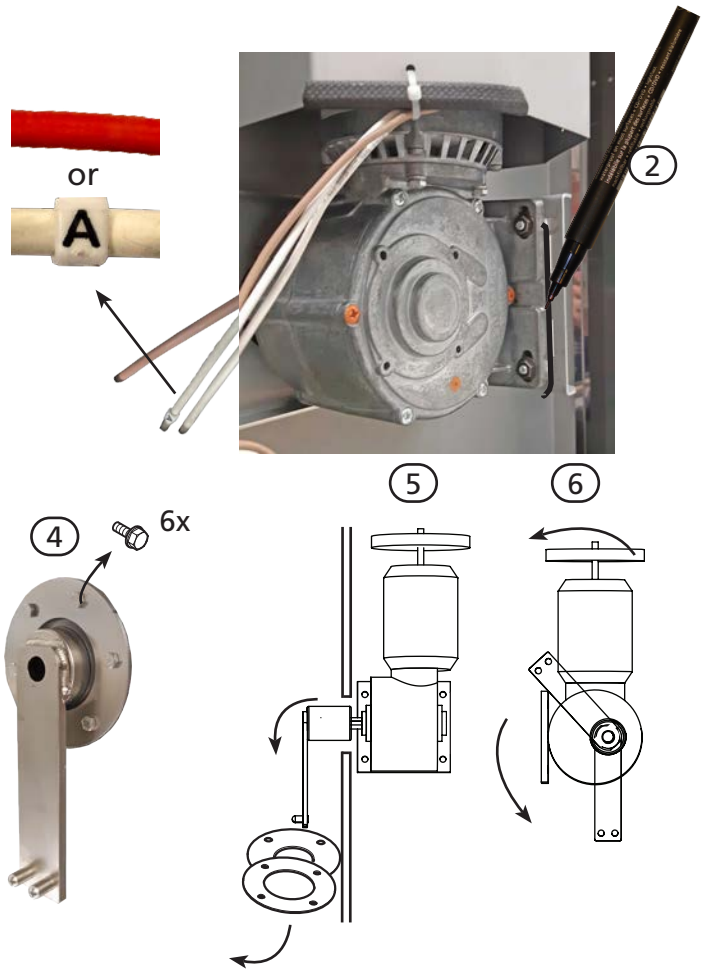

Removing the rotor motor:

1. Remove the side panel at the operatorpanel side.
2. Use a marker (e.g. Sharpie) to mark the position of the motor on the bracket.
3. Take the rotor shaft out of the cooking cavity.
4. Unscrew the 6 bolts from the shaft seal mounting plate.
5. Slide the mounting plate and lip-seal from the drive arm.
6. Put the drive arm (If applicable)in the position as shown. This can be done manually, if necessary, by turning the fan blade on the motor.
7. Disconnect the wiring of the motor.
8. Unscrew 4 screws and put the air guide aside.
9. Remove the (cooling) fan blade.
10. Unscrew 4 screws with nuts.
11. Take out the motor as shown.

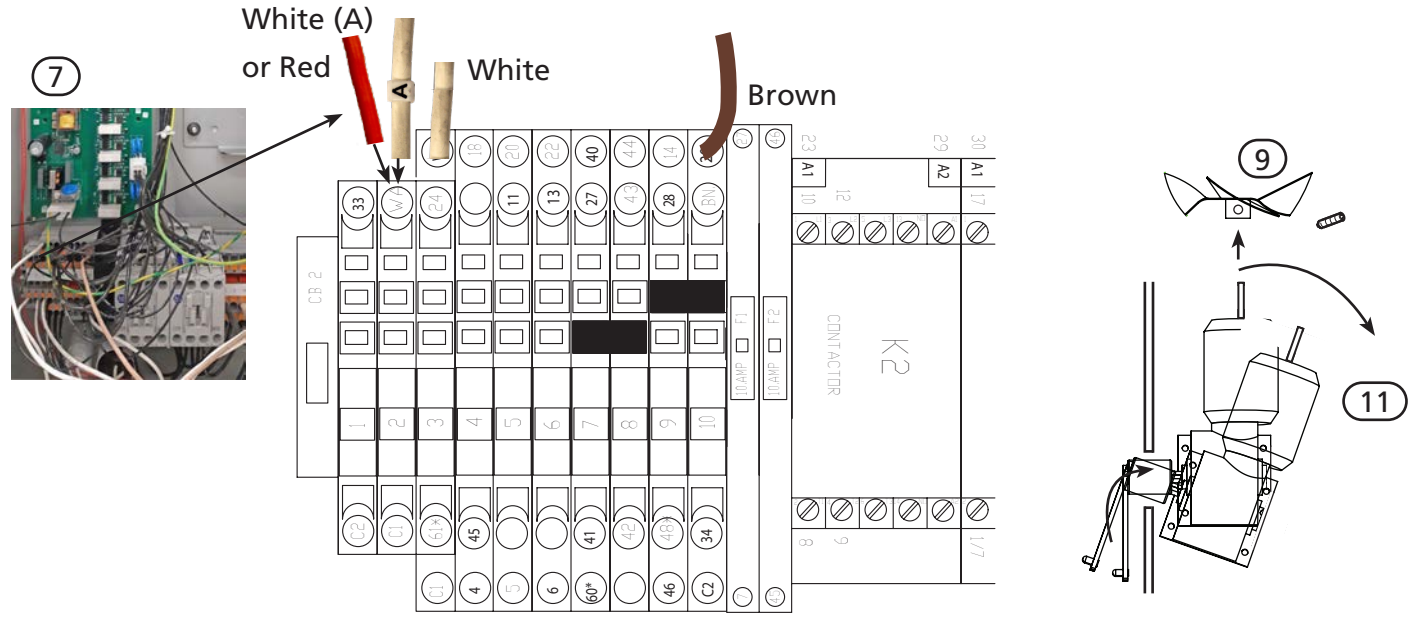

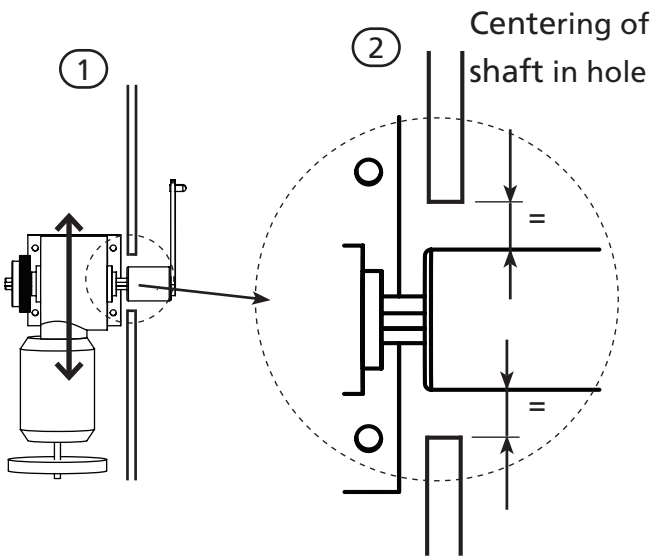

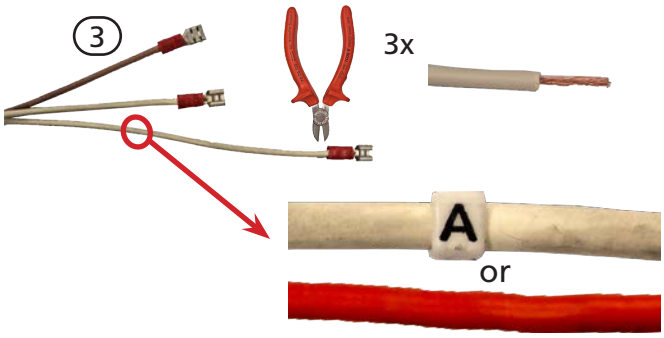

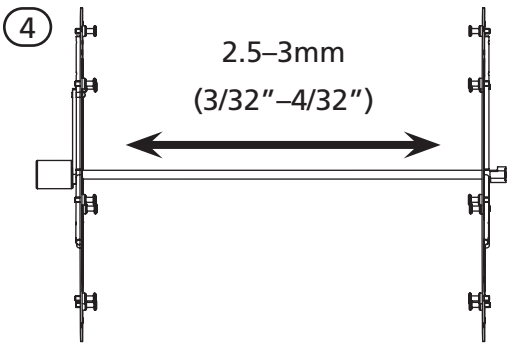

Installing the rotor motor

1. Install the motor on the bracket using the previously made mark (see #2 from removal, page 27).
2. The motor shaft should come through the center of the hole!
3. Connect the wiring of the (new) motor. See previous page for position of wires.

   If the wires have receptacles mounted, then these have to be cut off and the wires stripped.
   Note that the white wire, marked “A” is longer. Instead of a white wire with “A” marking, newer motors have a red wire.
4. Hook in the rotor and check the axial play. This should be 2.5–3mm (3/32”–4/32”)
5. Put power on the unit and test the rotation of the rotor. Interchange the two white wires if wrong. The air flow should go up!
6. Check if the drive arm in top position has the same distance to the side wall as in bottom position.
7. Mount the shaft seal when the position of the motor is ok and the screws are mounted tight.

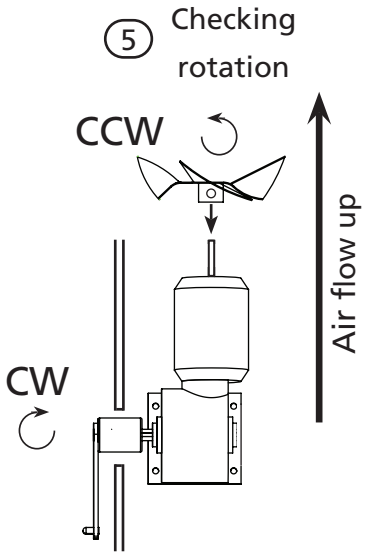

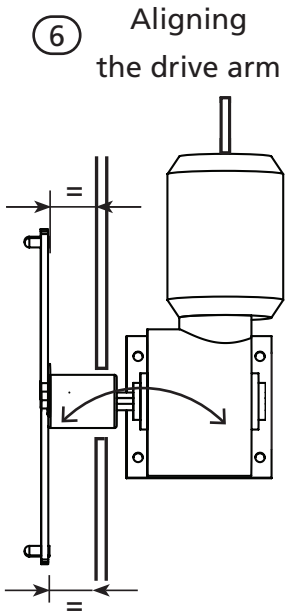

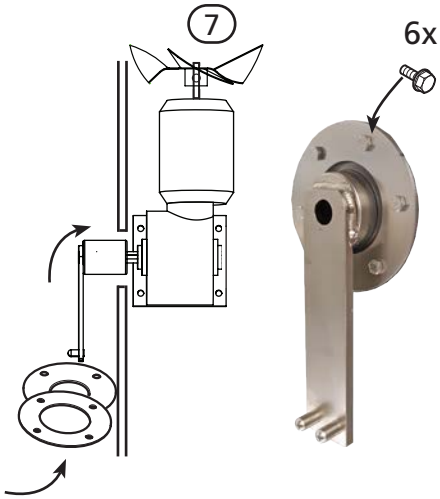

HIGH LIMIT THERMOSTAT

TDR 7back side

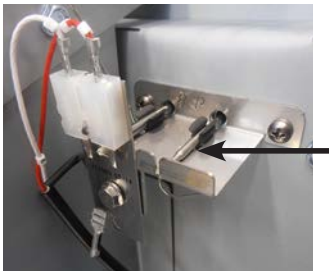

TDR 7

1. Remove the right side panel.
2. Remove the blower panel on the inside of the oven (this is only to check if the probe is on the right place).
3. Remove the thermostat probe from the clip and remove the probe.
4. Remove the screws on the electric panel that secure the thermostat.
5. Remove the thermostat and disconnect the wiring.

Reverse the procedure to install.

Note 1: *The probe sticks out of the side wall to the end of the bracket.*

Note 2: *Set the new high limit thermostat fully clockwise (see arrow).*

PT 1000 SENSOR

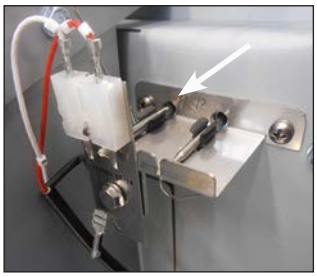

TDR 7

1. Remove the right side panel.
2. Remove the blower panel on the inside of the oven (this is only to check if the sensor is on the right place).
3. Disconnect the wiring of the sensor.
4. Unscrew the screw and pull out the sensor

Reverse the procedure to install.

Note 1: *The sensor sticks out of the side wall to the end of the bracket.*

DOOR INSIDE

1. Pull the inside door from the outside door.
2. Lift the inside door upward out of the hinges.
3. Place the new door in the hinges.
4. Close the inside door on the outside door.

Note: *Tightening of nuts max. 8 Nm. or 5.9 lbf.ft*

DOOR OUTSIDE

1. Remove the left side panel.
2. Lift the inner door out of the hinges and lay this aside.
3. Close the outer door.
4. Unscrew the 2 nuts behind the upper hinge. Keep door closed!
5. Hold the door on both sides and move this towards yourself, before lifting it out of the hinge at the bottom side. See to it that the washers stay on the hinge.
6. Place the top hinge on the new door.
7. Reverse the procedure to install the new door.

Adjusting the door (if necessary).

1. Loosen the nuts A of the upper hinge. The door must be closed.
2. Loosen the locknut B and adjust the bolt C in or out to adjust the door.
3. Tighten the nuts of the hinge and mount the left-hand panel.

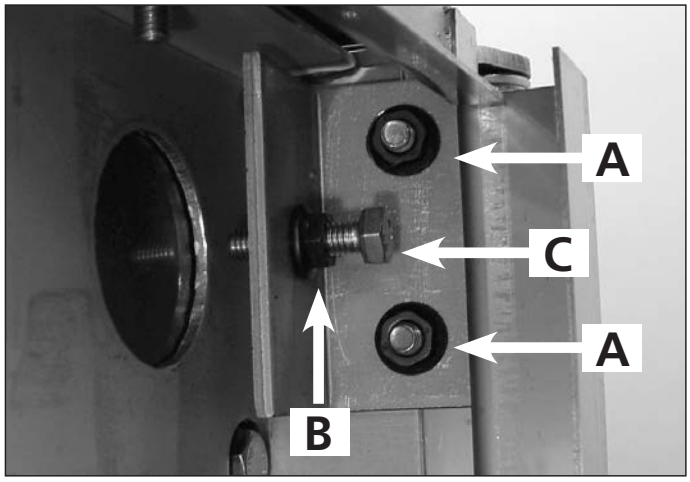

Note: *Tightening of nuts max. 8 Nm. or 5.9 lbf.ft*

WARNING: Disconnect the electrical power to the machine at the main circuit box. Place a tag on the circuit box indicating the circuit is being serviced.

MEASURING THE HEATING ELEMENTS

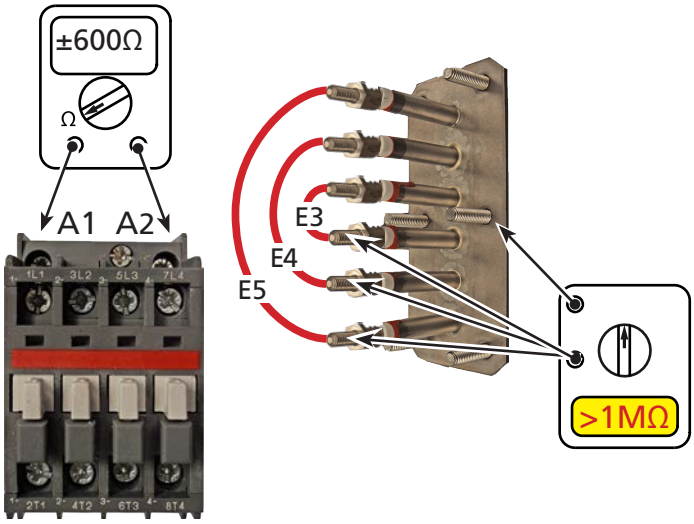

Heating element TDR 7

	200-208V (USA)
E3	3000W 14.5 Ω
E4	3000W 14.5 Ω
E5	3300W 13 Ω

If heaters have been stored for a longer period, moisture can go in and the insulation resistance can go down. Therefore it is good to measure this insulation resistance before installing the heaters.

In case this Insulation resistance is too low, it could be considered to dry the heater in an oven for 24 hours on 130°C (266°F). The longer the better.

Advise:

- *Keep stock limited.*
- *Store in conditioned space (for example in a box with silica gel)*

MEASURING THE BLOWERS

Blower of rotisserie

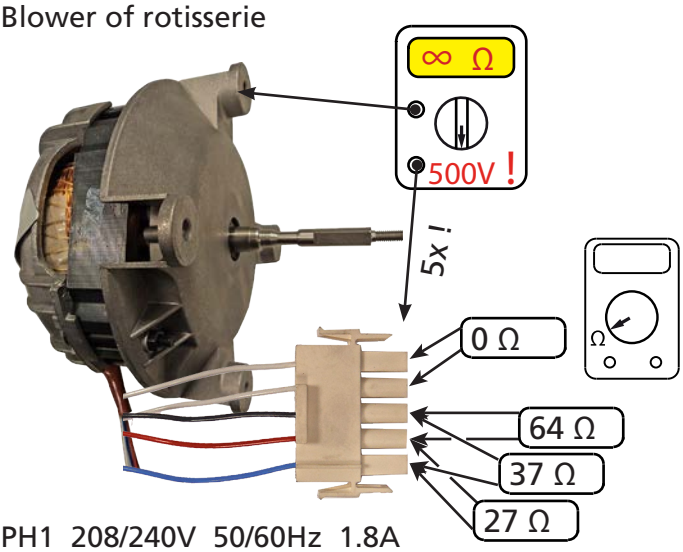

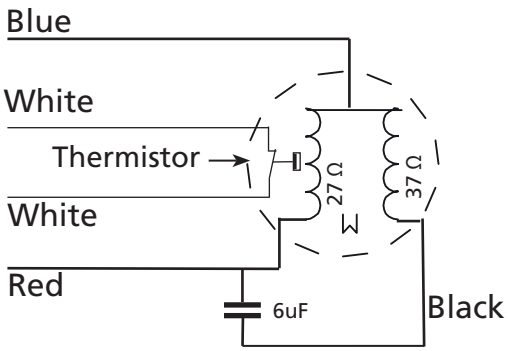

PH1 208/240V 50/60Hz 1.8A
5uF 400V Thermally protected

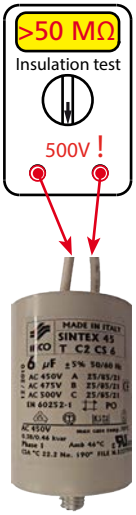

Charging with a test cable

Checking with Ω meter

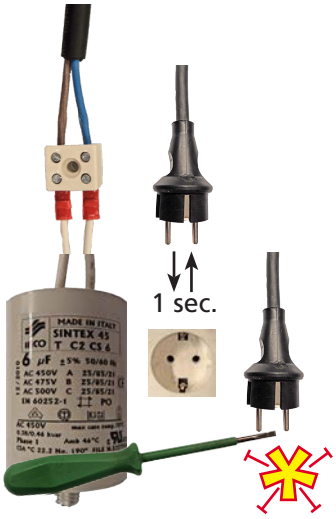

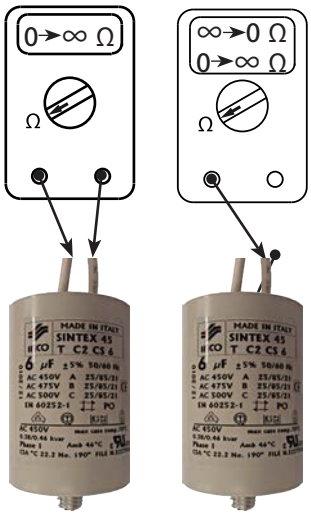

<u>The 6µF capacitor</u>

General

Even with a capacitance meter it is impossible to determine for sure if the capacitor is ok or not, because it can be leaking when it is connected to mains power.

A quick optical check often tells more. Search for leaking oil and / or bulges (lumps).

Measuring with an insulation tester

Work under safe conditions according local legislation!

Set the tester in 500V position.

The value will not reach ∞ Ω, but will go up and down a little. When it is above 50MΩ it wil be ok. Disconnect the test leads while the value is at the highest position. The capacitor is now charged with ± 500VDC!!

Leave it for a few seconds and then put the wires together. A loud spark must arise. If not, the capacitor is leaking (loosing its charge).

It is also possible to charge the capacitor by shortly connecting it to the mains supply (208V~). The same spark must arise. Do this a few times. The capacitor will not be charged when the leads are disconnected during the “zero crossing” of the mains sinus. It is ok when a spark arises once.

Measuring with an Ω meter.

Be sure that the capacitor is empty!

The value will go up until ∞ Ω is reached.

Exchange the test leads. The value will go down, through “0” and up again.

If not, the capacitor is broken.

If ok, it is still not sure if the capacitor is ok. It might leak when it is connected to the mains power!

MEASURING THE ROTOR (DRIVE) MOTOR

Measuring with an insulation tester

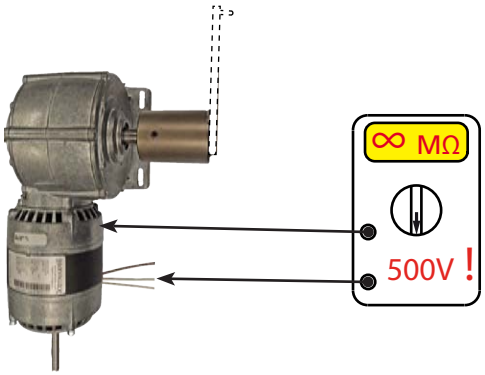

Measuring with an Ω meter.

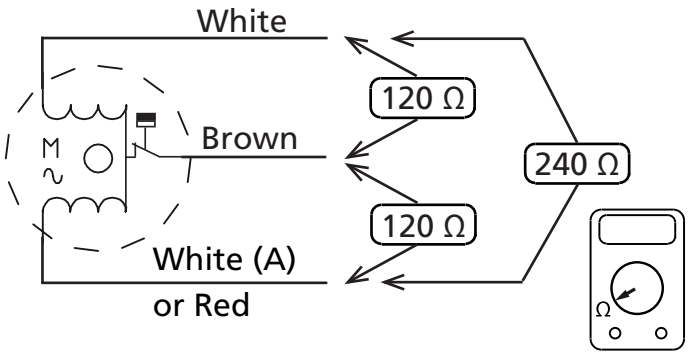

MEASURING THE 500W LAMP

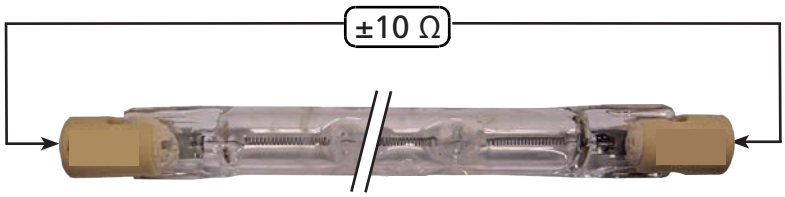

230V 500Watt

MEASURING THE PT1000 SENSOR

PT1000 sensor

The oven temperature is controlled by a PT1000 sensor, mounted in the top at the side.

See the resistance overview for the PT1000 sensors.

°C	PT1000
-20	921.60
-10	960.90
0	1000.00
10	1039.00
20	1077.90
25	1097.40
30	1116.70

°C	PT1000
40	1155.40
50	1194.00
60	1232.40
70	1270.00
80	1308.90
90	1347.00
100	1385.00
110	1422.00

°C	PT1000
120	1460.60
130	1498.20
140	1535.80
150	1573.10
200	1758.43
250	1940.81
300	2120.30

TROUBLE SHOOTING BY SYMPTOM

Symptom	Possible causes
No power to oven controls.	1. Main breaker open. 2. Fuse blown (F1). 3. Fuse power and I/O board blown (F3). 4. Electronic control inoperative. 5. Wiring or flatcable loose/broken.
Main fuse or breaker blows.	1. Wiring incorrectly. 2. Heating element, drive motor, blower or contactor shorted. 3. Wiring shorted.
Rotor drive motor does not run during cooking cycle.	1. Main fuse on L1 inoperative. 2. Capacitor malfunction. 3. Motor malfunction. 4. Rotor switch malfunction. 5. Door switch malfunction. 6. Wiring loose. 7. Power and I/O board malfunction.
Rotor drive motor stops and runs again after a certain period.	1. Thermal protection activated (105°C / 220°F). This shuts off after the temperature is below 105°C / 220°F.
Rotor drive motor does not stop	1. Short circuit on rotor switch 2. Rotor switch pushed in. (unit is placed with the back to the wall.
Blower motor does not run.	1. Capacitor malfunction. 2. Motor inoperative. 3. Power and I/O board malfunction. 4. Wiring loose.
Blower motor stops and runs again after a certain period.	1. Thermal protection activated (140°C). This shuts off after the temperature is below 140°C.
Oven temperature differs from temperature setting.	1. Incorrect line voltage. 2. (safety) thermostat malfunction. 3. Blower motor inoperative (or wrong rotation direction). 4. Electronic control inoperative. 5. PT 1000 sensor malfunction. 6. Sensor (probe) not in right place. 7. Dirty fan guard or fan blade.
All heating elements out, both halogen lamps and blower operate while oven cavity is below set temperature.	1. (safety) thermostat malfunction. 2. Contactor inoperative. 3. Power and I/O board malfunction. 4. Wiring loose.
Oven temperature does not reach desired temperature.	1. (safety) thermostat malfunction. 2. Contactor inoperative. 3. PT 1000 sensor malfunction. 4. Sensor (probe) not in right place. 5. Electronic control inoperative. 6. Heater(s) inoperative. 7. Incorrect line voltage.

Symptom	Possible causes
Infrared Halogen lamp(s) do not work.	1. Contactor inoperative. 2. Lamp(s) broken. 3. Lamp holder broken. 4. Wiring loose.
Infrared Halogen lamps do not shut off.	1. Contactor inoperative.
No display and/or touch screen does not function.	1. Main breaker open. 2. Remove plug out of socket and connect plug again. 3. Loose flat cable from CPU/display to power and I/O board. 4. Fuse (1A Slow blow) on power and I/O board blown. 5. Power and I/O board malfunction. 6. Loose flatcable from CPU to touch screen. 7. CPU board malfunction. 8. Door switch malfunction. 9. Touch screen malfunction. 10. Touch screen sensititvity can be set in the Service Menu (under “Swipe sensitivity”) 11. Earth wire on CPU board makes contact with the solder point on the board.
No or low sound.	1. Audio level in Manager menu is set to a low value. 2. Loose connection or broken speaker.
Infrared Halogen lamp(s) do not work.	3. Contactor inoperative. 1. Lamp(s) broken. 2. Lamp holder broken. 3. Wiring loose.
Infrared Halogen lamps do not shut off.	1. Contactor inoperative. 2. Power and I/O board malfunction.

TROUBLE SHOOTING BY PART / FUNCTION.

Description of part / function	Symptoms	Possible cause	Action
Inside door	Broken glass	Slamming of door. Fastening bolts and nuts are loose. No PTFE ring between steel and glass.	Give instruction to operator. Tighten all fastenings. Mount new glass with PTFE rings between glass and steel.
Outside door	Broken glass	Slamming of door. Fastening bolts and nuts are loose. No PTFE ring between steel and glass.	Give instruction to operator. Tighten all fastenings. Mount new glass with PTFE rings between glass and steel.
	Door adjustment	Door not well adjusted and closes against bottom side.	Adjust door on hinge and tighten the hinge plate.
Heating element	Rotisserie doesn't reach adjusted temperature	Wiring. Element malfunction.	Check the wiring. Check the power on the element. Check the current with AC current tester. See table in 'Measuring the heating elements' on page 31.
	Duration of grilling time is too long	Wiring. Element malfunction.	Check the wiring. Check the current with AC current tester. See table in 'Measuring the heating elements' on page 31.
Safety thermostat	Contactor does not come in after starting of program	Wiring. Thermostat malfunction.	Check the wiring. Check if the thermostat is making contact.
	Contactor switches off before reaching the adjusted temperature in program	Thermostat malfunction. Thermostat probe not in right position.	Check if the thermostat is turned fully clockwise (contact closed). Check the position of the thermostat probe.
Contactor	Contactor doesn't come in	Wiring. Coil malfunction.	Check the wiring. Check resistance of the coil. This should be 525Ω.
	Contactor comes in, but one or more functions don't come in	Contact burned.	Check the wiring. Check the power on al contacts. Check the contacts of the contactor.

Descrip-tion of part / function	Symptoms	Possible cause	Action
Capacitor	Drive motor or blower don't work	Wiring. Capacitor malfunction.	Check the wiring. Check function after connecting a new capacitor. *Checking of capacitor:* *Discharge capacitor with screwdriver.* *Set meter on MΩ and connect the pins of the meter on contacts, value runs up.* *Change the pins on contacts, value runs up again. This means the capacitor is OK.*
Drive motor	Motor doesn't run and / or main fuse burned	Wiring. Coil malfunction.	Check the wiring. Check the power to the motor. Check insulation value of coil with an Insulation tester (Megger) on 500V. Minimum value is 0.5 MΩ. Check resistance of the coils. See chapter Electrical tests. Between whiteA (sometimes red) and white wire 240±2 Ohm. Between whiteA (or red) and brown wire 120± Ohm. Between white and brown wire 120± Ohm.
		Reduction gearbox.	Check if reduction gearbox is blocked.
	Motor runs after starting it up by hand	Capacitor malfunction.	Check capacitor (see capacitor) or connect new capacitor.
	Motor stops during process and comes in again after a period of time	Coil overheated, thermistor switches off (105°C – 221°F).	Check rotation direction. Air should be flowing upwards over the motor. Check cooling circuit of motor. Check if rotisserie is close to another heat source. Measure temperature motor during process.
	Main fuse burned	Short circuit in coil to earth.	Check insulation value of coil with Megger on 500V. Minimum value is 0.5 MΩ.

Description of part / function	Symptoms	Possible cause	Action
Blower ***Note:*** The blower in the rotisseries have a 6 µF capacitor. The minimum RPM is 2500.	Blower doesn't run and / or Main fuse burned	Wiring. Coil malfunction.	Check the wiring. Check the power on the blower. Check insulation value of coil with a Megger on 500V. Minimum value is 0.5 MΩ. Check resistance of the coils. *See chapter Electrical tests.* *Between black and red wire 64±2 Ohm.* *Between black and blue wire 37±2 Ohm.* *Between red and blue wire 27±2 Ohm.*
	Blower runs after starting it up by hand	Capacitor malfunction.	Check capacitor (see capacitor) or connect new capacitor.
	Blower stops during process and comes in again after a period of time	Coil overheated, thermistor switches off (140°C / 284°F).	Check cooling circuit of blower. Check if rotisserie is close to another heat source. Measure temperature blower during process.
	Temperature indication on display runs up very fast (180°C / 355°F after 5 minutes)	Blower doesn't turn and heat stays in top of cavity.	Check the wiring. Check the power on the blower.
PT-sensor	PT1000 overflow error.	No connection between wires.	Check the wiring. Check thin wire on sensor.
	PT1000 underflow error	Full contact between wires of sensor. Short circuit in sensor.	Check the wiring. Measure resistance of sensor. This is zero.
	Rotisserie does not reach adjusted temperature	Malfunction sensor.	Measure resistance of sensor with a thermometer probe next to the sensor. See table in this manual.
		Sensor not in right position.	Check position of sensor
	Temperature indication on display runs up too fast	Malfunction Sensor	Measure resistance of sensor. See table in 'Measuring the PT1000 sensor' on page 33.

Descrip-tion of part / function	Symptoms	Possible cause	Action
Touch screen	Not reacting on touch	Touch pad is dirty	Use the clean screen function and clean the screen.
		Broken or loose flat cable	Check flat cable connection between CPU board and keypad.
		Sensitivity setting	Change “Swipe sensitivity” in Service menu
		Panel is loose	Check if touch screen is correctly glued to the glass.
Keypad(s) react strange / automatic	Automatic stop-ping of pro-gram.	Moist on / or running over the touch screen	1. Check for condensation. When the unit is cold and the environment is hea-ting up, condensation can be expected. 2. Check for water, dripping on the top of the unit and running down.
Display/CPU on operation panel and po-wer I/O board	No illumination on display	Wiring.	Check the wiring. Check the power on the CPU by the two flashing red LEDs just near the ribbon cable on the CPU board.
		Fuse blown.	Check the 1A slow blow fuse on the po-wer I/O board. Check the fuses.
		Flat cable.	Check gray flat cable connection. Check functions after connecting a new gray flat cable.
		Display/CPU malfunc-tion.	Check functions after installing a new CPU board with display.
		Power board malfunc-tion.	Check functions after installing a new power I/O board.
	Display shows strange things.	Parameters not on right settings.	Check parameters.
		Wrong software or loss of data.	Check software version or upload latest software.

ELECTRICAL PARTS

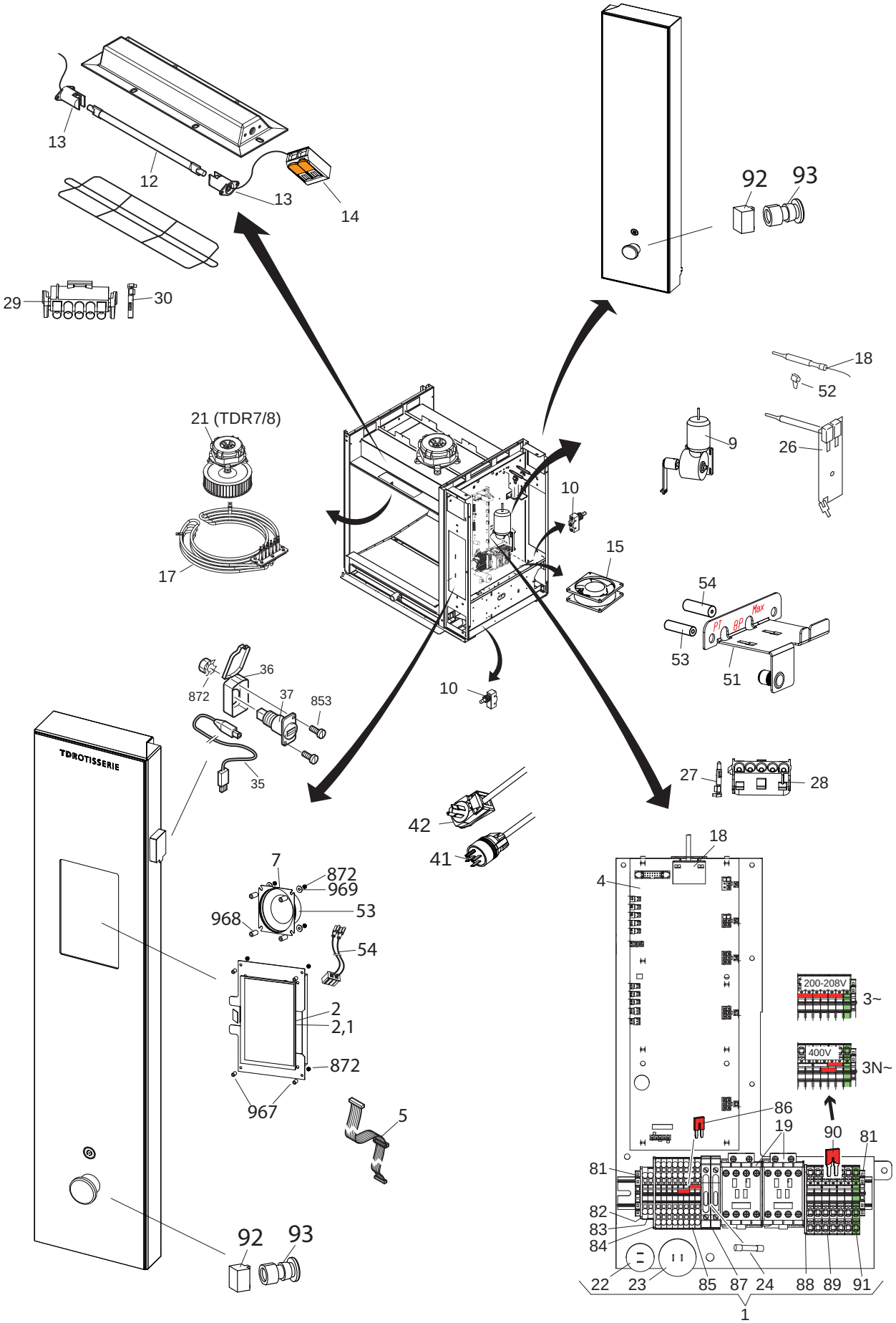

PARTS LIST ELECTRICAL PARTS

Pos	Part number	Description
1	9290344s	Electric panel, ass.
2	9292288s	CPU board + Touch Panel
4	9192400s	Power & I/O board
5	9172314	Ribbon cable L= 1500 mm, 14 pins
6	9311047	Cable, speaker s-control
7	9311046s	Speaker
9	9293002s	Gearmotor, complete with drive head, TDR7
10	3701233s	Door switch (depending on availability)
12	9291001s	Infrared Halogen lamp 500W
13	9052826	Lamp holder
14	9291122	Connector, 2 pole
15	3500031	fan, cooling
17	9292028s	Heating element 208 V, 9.3 KW
18	9040970	Thermostat
19	3500069	Contactor
21	9298551s	Blower, ass. TDR7
22	3701228	Capacitor 2.5 uF
23	9192034	Capacitor 6 uF
24	9191197	Fuse 10A, ceramic 32x6.3
26	9172310	Temperature sensor PT 1000
27	0601466	Crimp contact male, M-N-L
28	9291014	Socket, 5p, Mate-N-Lock
29	3701272	Plug, 5p, Mate-N-Lock
30	0601458	Crimp contact female, M-N-L
35	9291012	USB cable
36	9291010	Cover USB adapter
37	9291011	USB adapter
41	9172404	Connecting cable with plug15-30P

Pos	Part number	Description
42	9172425s	Connecting cable with plug 15-50P L=140" With strain relief AWG8
42,1	9172426s	Connecting cable with plug 15-50P L=100" With strain relief AWG8
51	9294069s	Bracket temperature sensors, TDR7
52	9110072	Clip
53	9293095	Seal, silicon Ø10 x ø4 L=45
54	9293096	Seal, silicon Ø12 x ø3 L=45
70	9298530	Control panel, ass. + keypad, TDR7
81	9191222	End Clamp Clipfix 35-5 PHX
83	9191352	Terminal PT 6 (GY) 6 qmm PHX
84	9191347	End cover PT 6
85	9191232	Terminal, 4 pole 4^2 Grey
86	9191238	Plug-in bridge FBS 2-6 PHX
87	9191218	Fuse holder Phoenix
88	9191223	End cover PT 4
89	9191349	Terminal, 3 pole 6^2 Grey
90	9191355	Plug-in bridge FBS 2-8 PHX
91	9191348	Terminal, 3 pole 6^2 Green/Yellow
92	9291003	Switch bloc
93	9291002	Pedestal button

For fasteners and all other POS numbers above 800, see 'Fasteners' on page 56

CONNECTORS AND WIRING

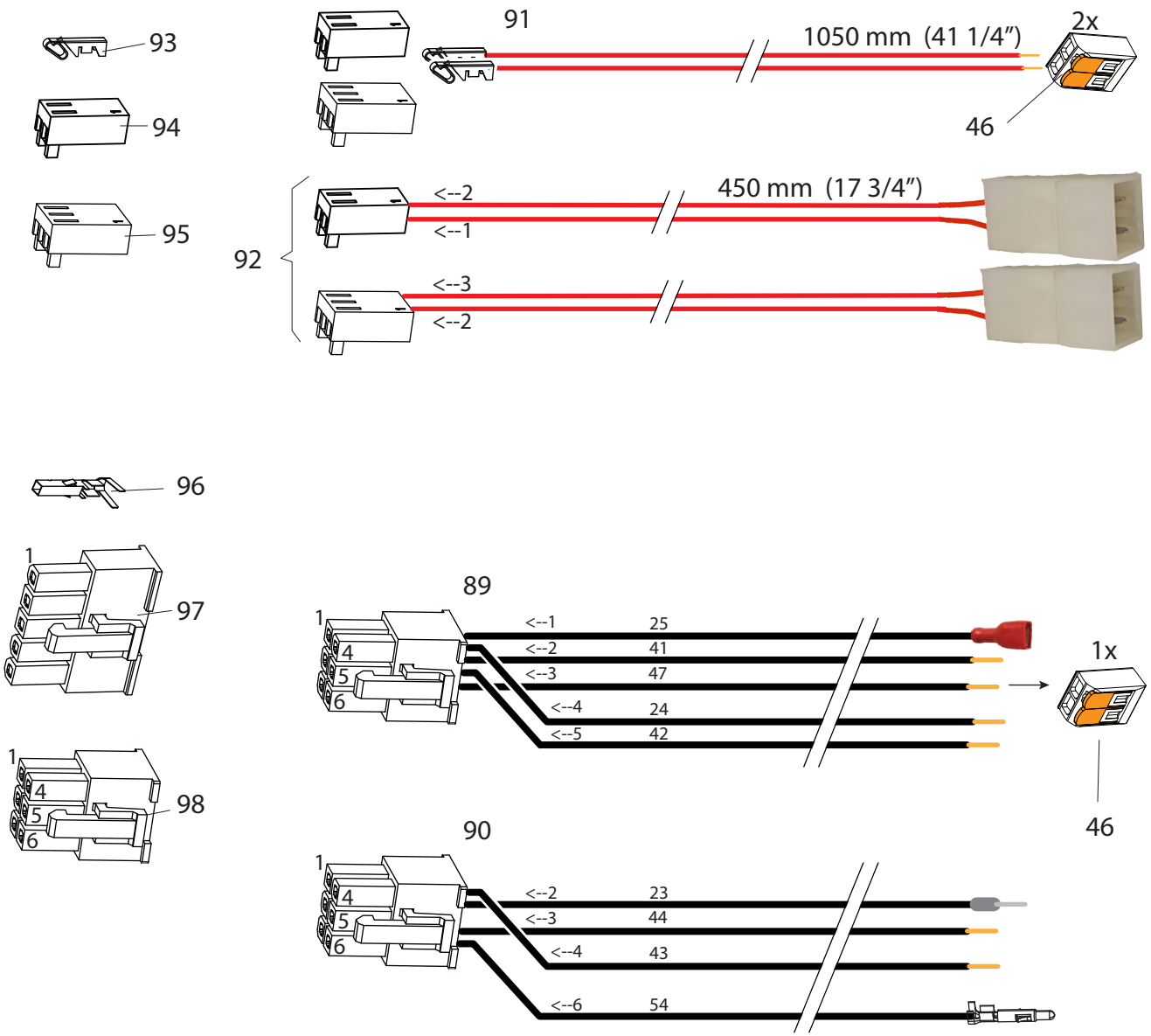

PARTS LIST CONNECTORS AND WIRING

Pos	Part number	Description
89	9290858s	Wire repair set TDR J2
90	9290859s	Wire repair set TDR J6
91	9310850s	Wire repair set inputs
92	9310816s	Connection set TDR hood
93	9291176	Crimp contact, inputs
94	9291175	Socket, 2 p, inputs
95	9291177	Socket, 3 p, inputs
96	3701231	Crimp contact, outputs
97	9291170	Plug, 5p, power
98	9291173	Plug, 6p, outputs
27	601466	Crimp contact male, M-N-L
28	9291014	Socket, 5p, Mate-N-Lock
29	3701272	Plug, 5p, Mate-N-Lock
30	601458	Crimp contact female, M-N-L

DOORS

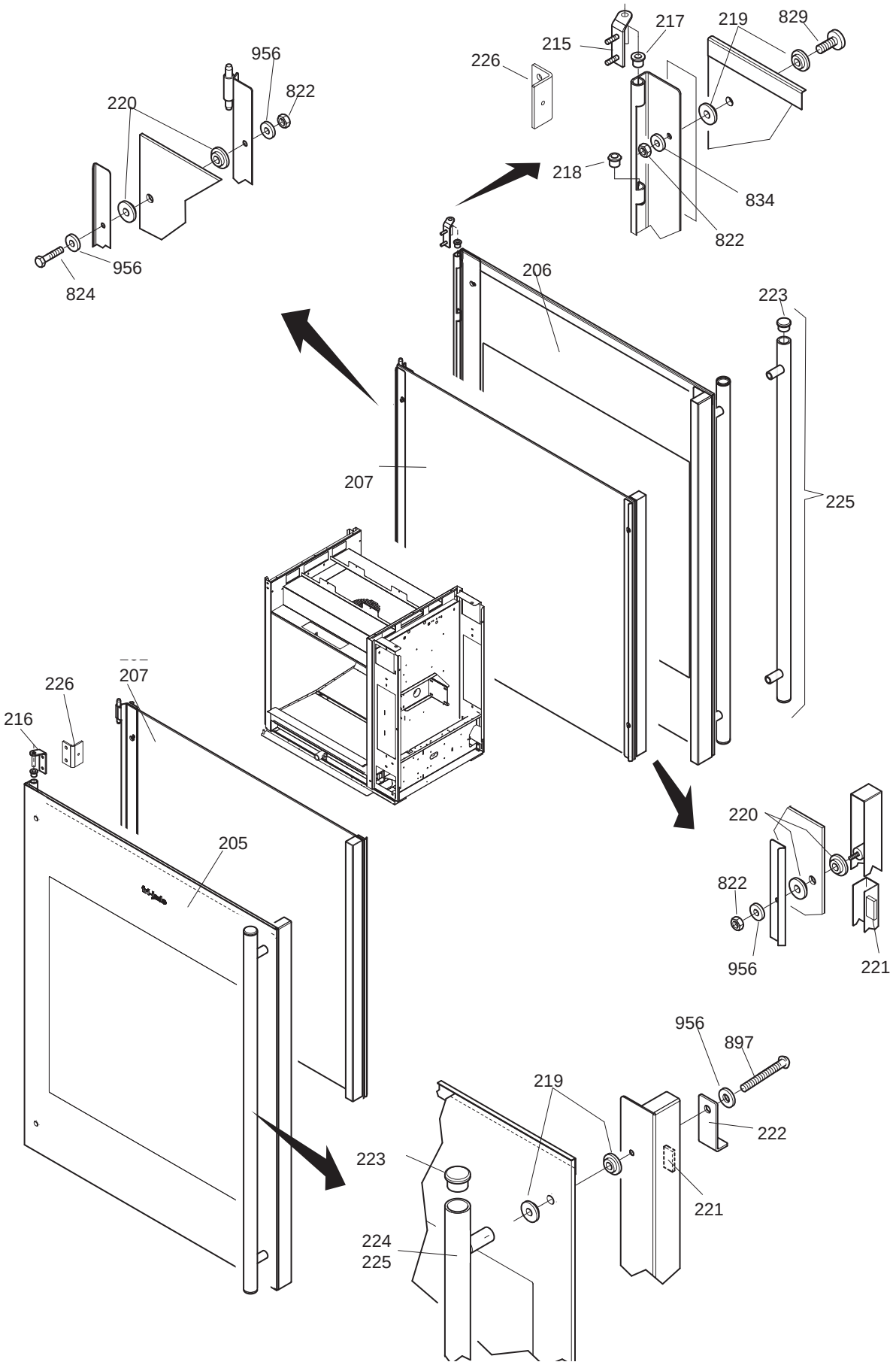
956
822
220
956
824
226
215
217
219
829
218
834
822
206
223
207
225
226
207
216
205
220
822
956
221
956
897
219
222
223
221
224
225

PARTS LIST DOORS

Pos	Part number	Description
205	9298510s	Door service side, ass., TDR7
206	9298513s	Door customer side, ass., TDR7
207	9298512s	Door inside, ass., TDR7
215	9290410	Hinge, right
216	9290409	Hinge, left
217	9172054	Brass bearing 8 mm
218	9172122	Brass bearing 8 mm, adjusted
219	3702342	Flange bush, PTFE 3 mm
220	3702341	Flange bush, PTFE 2 mm
221	9070141	Magnet block
222	9294229	Blocking bracket
223	2103209	Plug, door handle
225	9298101	Door handle, kit, TDR7
226	9174154	Adjusting bracket

For fasteners and all other POS numbers above 800, see ‘Fasteners’ on page 56

PANELS

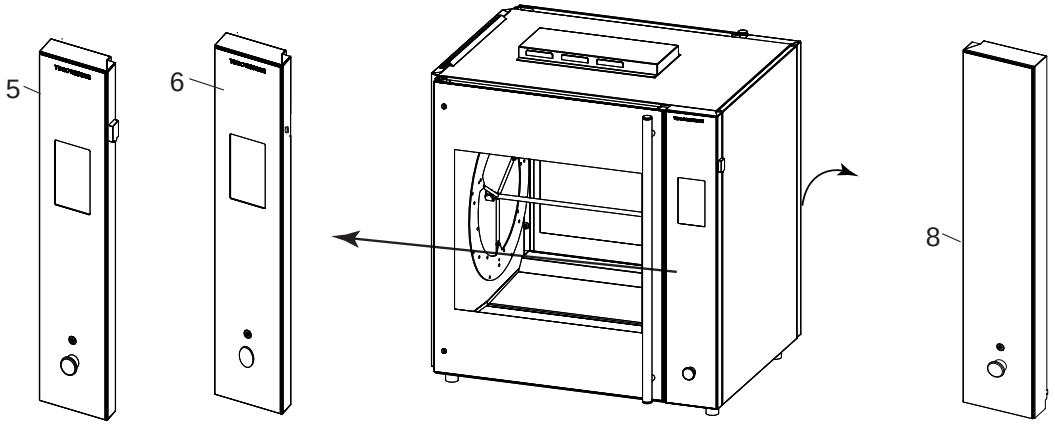

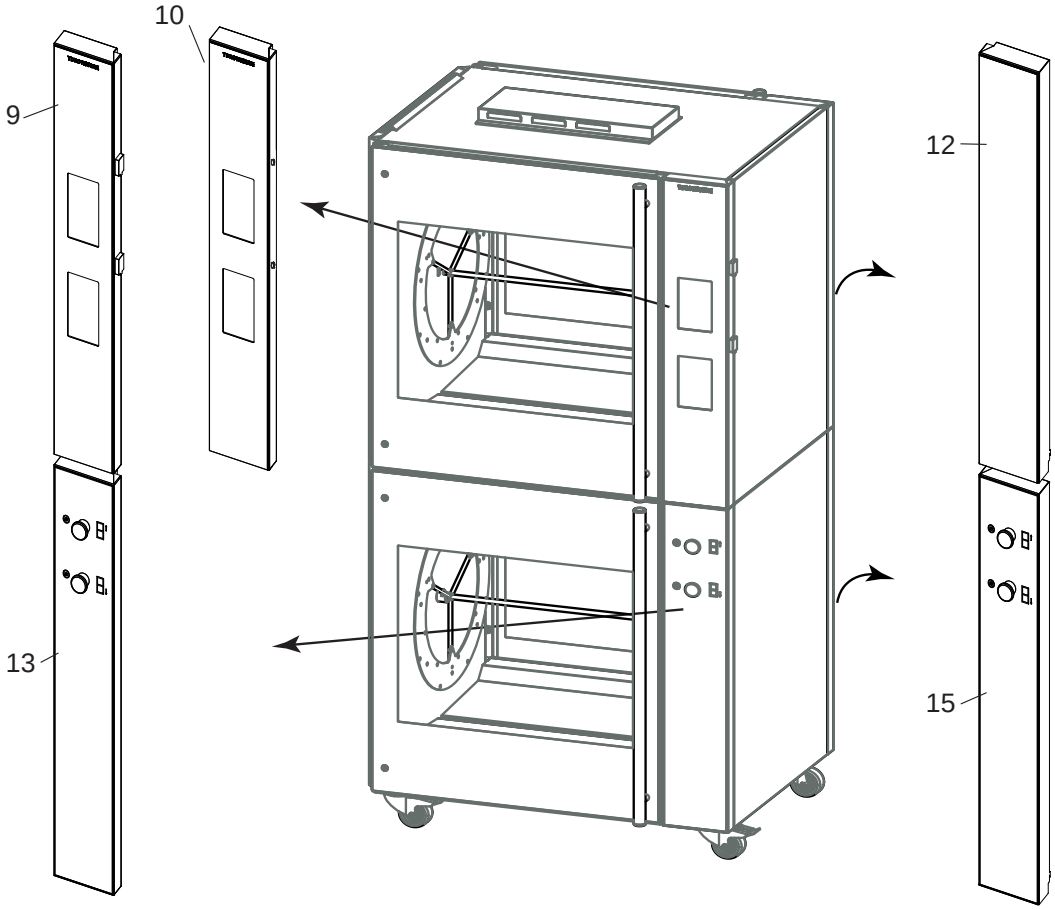

PARTS LIST PANELS

Pos	Part number	Description
5	9298584s	Panel TDR-7/8s + s-control + button operator side WM
6	9298576s	Panel TDR-7/8 s operator side
8	9298578s	Panel TDR-7/8 + button non operator side
9	9298585s	Panel TDR-7+7/8+8s + s-control + button operator side WM
10	9298577s	Panel TDR-7+7/8+8 s operator side
12	9298534s	Panel TDR-7+7/8+8 blind non operator side
13	9298580s	Panel TDR-7+7/8+8 + buttons operator side
15	9298579s	Panel TDR-7+7/8+8 + button non operator side

ILLUMINATION

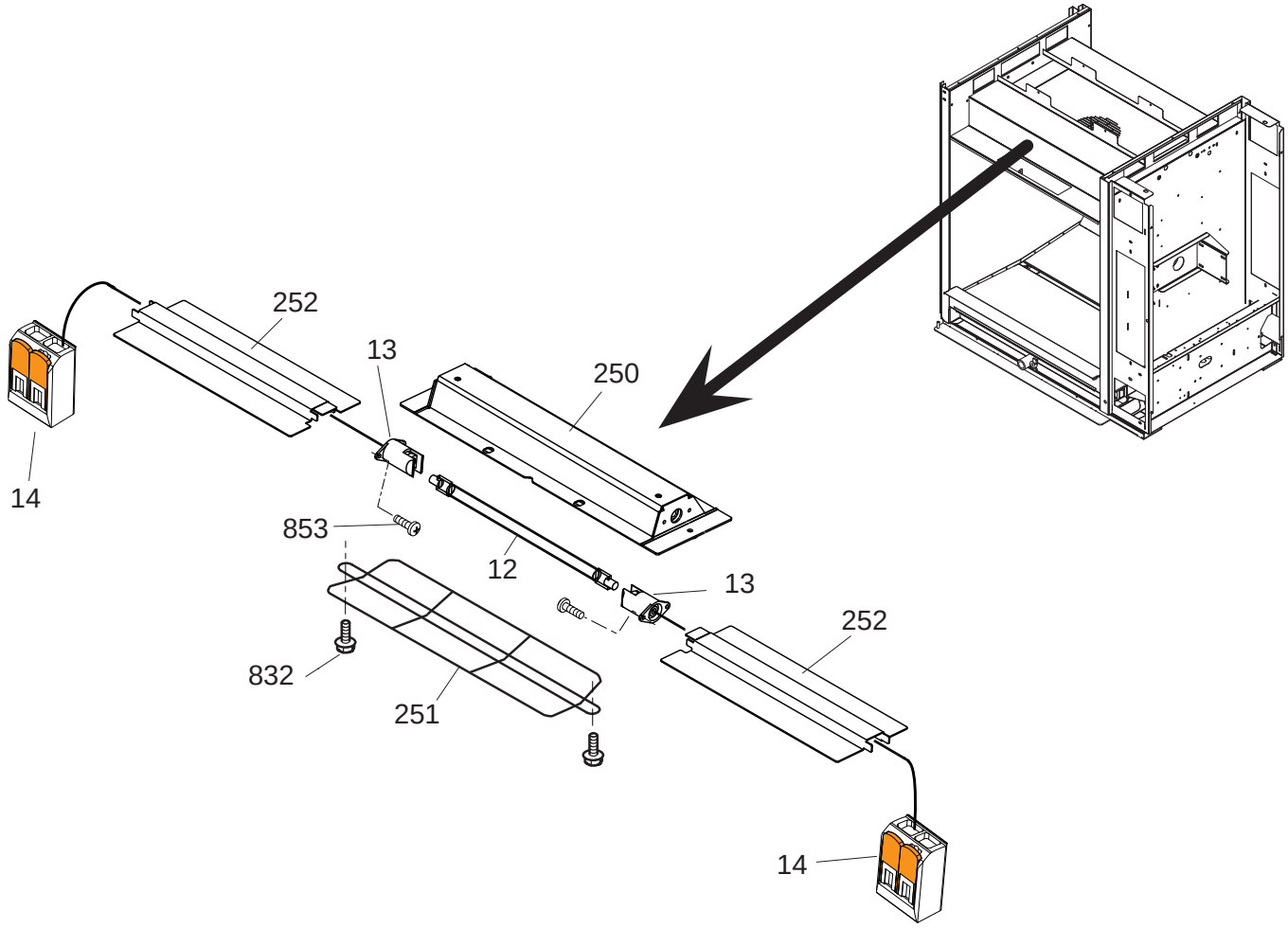

PARTS LIST ILLUMINATION

Pos	Part number	Description
12	9291001s	Infrared Halogen lamp 500W
13	9052826	Lamp holder
14	9291122	Connector, 2 pole
250	9294463s	Light fixture + end plate L and R
251	9292061	Protection guard, infrared lamp
252	9294227	Channel, lamp wiring
853	2105045	Screw M3x10
832	4288231	Tensilock bolt M5 x 10

For fasteners and all other POS numbers above 800, see 'Fasteners' on page 56

HEATING

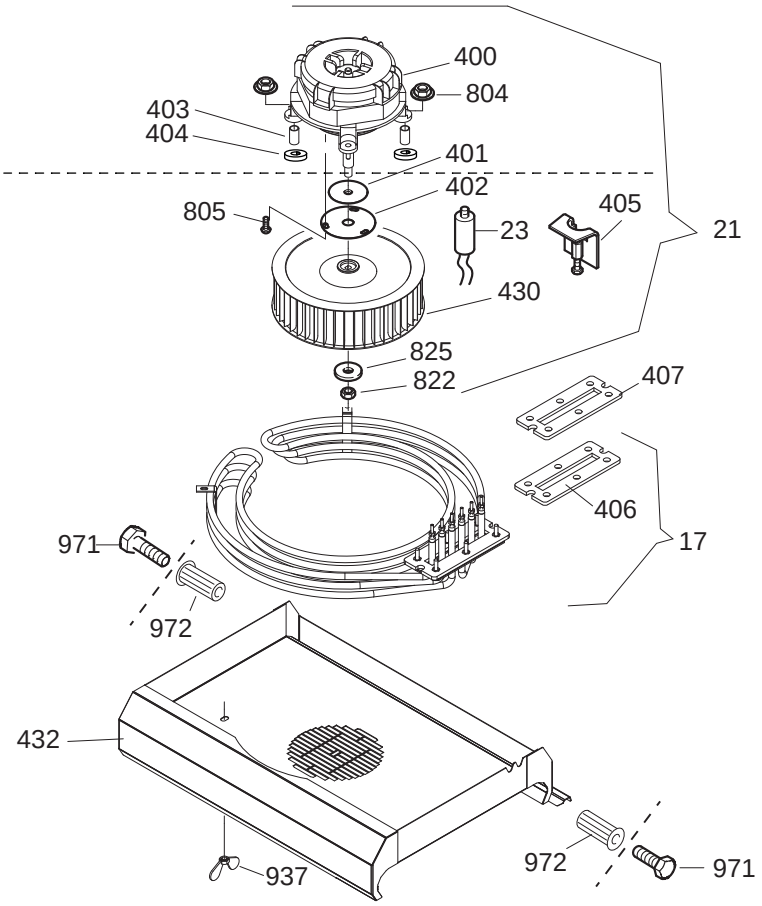

PARTS LIST HEATING

Pos	Part number	Description
17	9292028s	Heating element 208 V, 9.3 KW
21	9298551s	Blower, ass. TDR7/8
23	9192034	Capacitor 6 uF
400	9293020s	Blower motor, with conversion cable 3 to 5 pole
401	3702325	Seal, blower shaft, PSS
402	9294007	Pressure plate
403	9293004	Spacer Ø12xø6.2 H=17mm
404	9294083	Spacer Ø15xø6.2 H=3mm
405	9298600	Puller
406	9194489	Gasket, heating element
407	9194501	Pressure plate
430	3701273	Turbine Ø 200 mm x 61
432	9290411s	Blower panel

For fasteners and all other POS numbers above 800, see 'Fasteners' on page 56

ROTOR

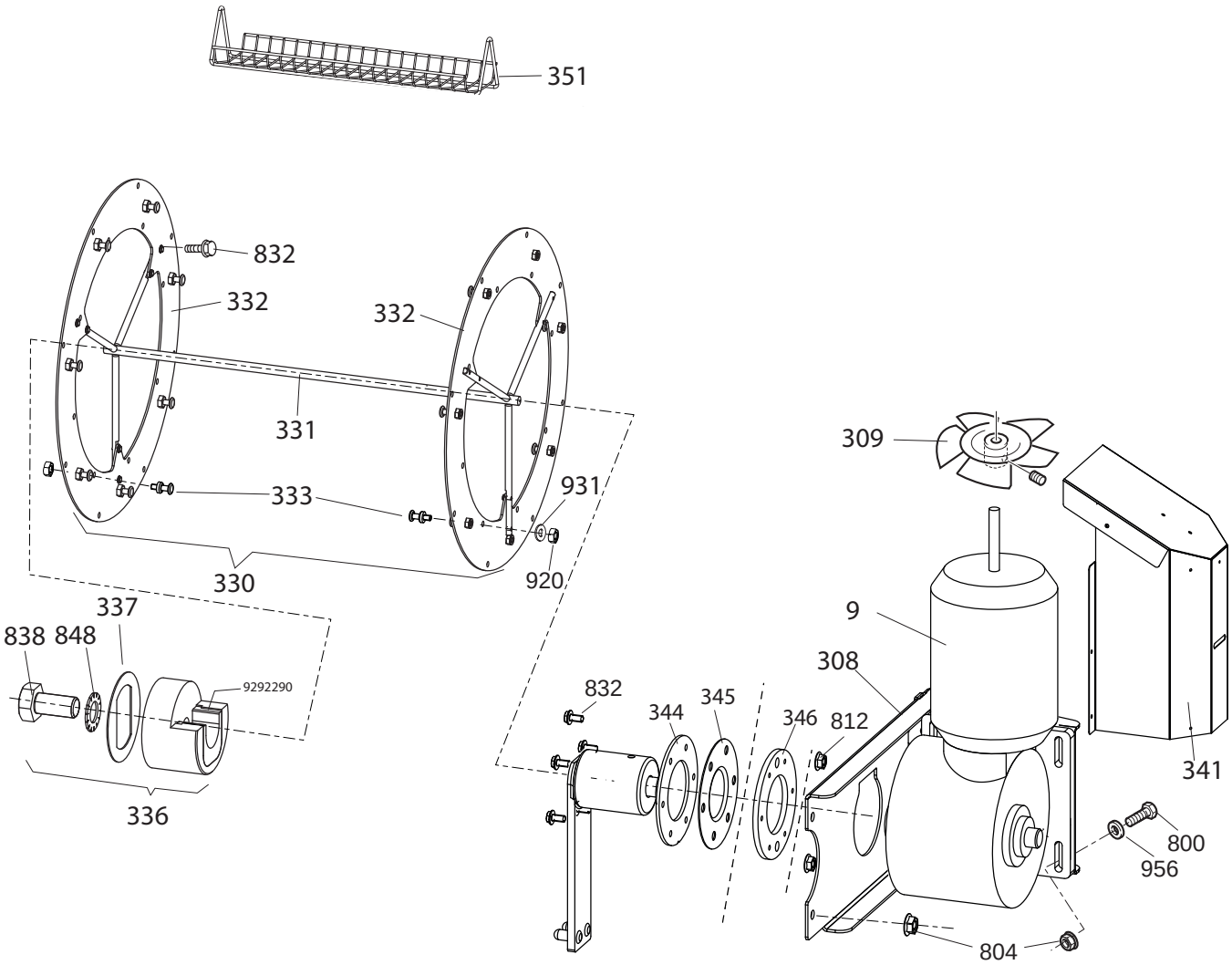
351
832
332
332
331
333
931
920
330
337
838
848
9292290
336
309
9
308
832
344
345
346
812
341
800
956
804

PARTS LIST ROTOR

Pos	Part number	Description
9	9293002s	Gearmotor, complete with drive head, TDR7
22, page 40	3701228	Capacitor 2.5 uF for rotor motor
308	9290444	Support plate, rotor motor
309	9172078	Fanblade Ø 150 mm, rotor motor
330	9172274	Rotorset ass. 8 meat forks, stainless steel
331	9070272	Rotor shaft
332	9174623	Rotor disc 3 mm
333	9172169	Support pin
336	9172063s	Bearing ass., rotor TDR7
337	9292245	Seal
341	9294421	Air guide, fan rotor motor TDR7
344	9294649	Pressure ring, 6 holes
345	9292244	Shaft seal, 6 holes
346	9294650	Reinforcement ring, 6 holes
351	9172213	Meat basket, SS, coated
351,1	9172214	Meat basket, SS, coated, set of 7

For fasteners and all other POS numbers above 800, see ‘Fasteners’ on page 56

SHEET METAL

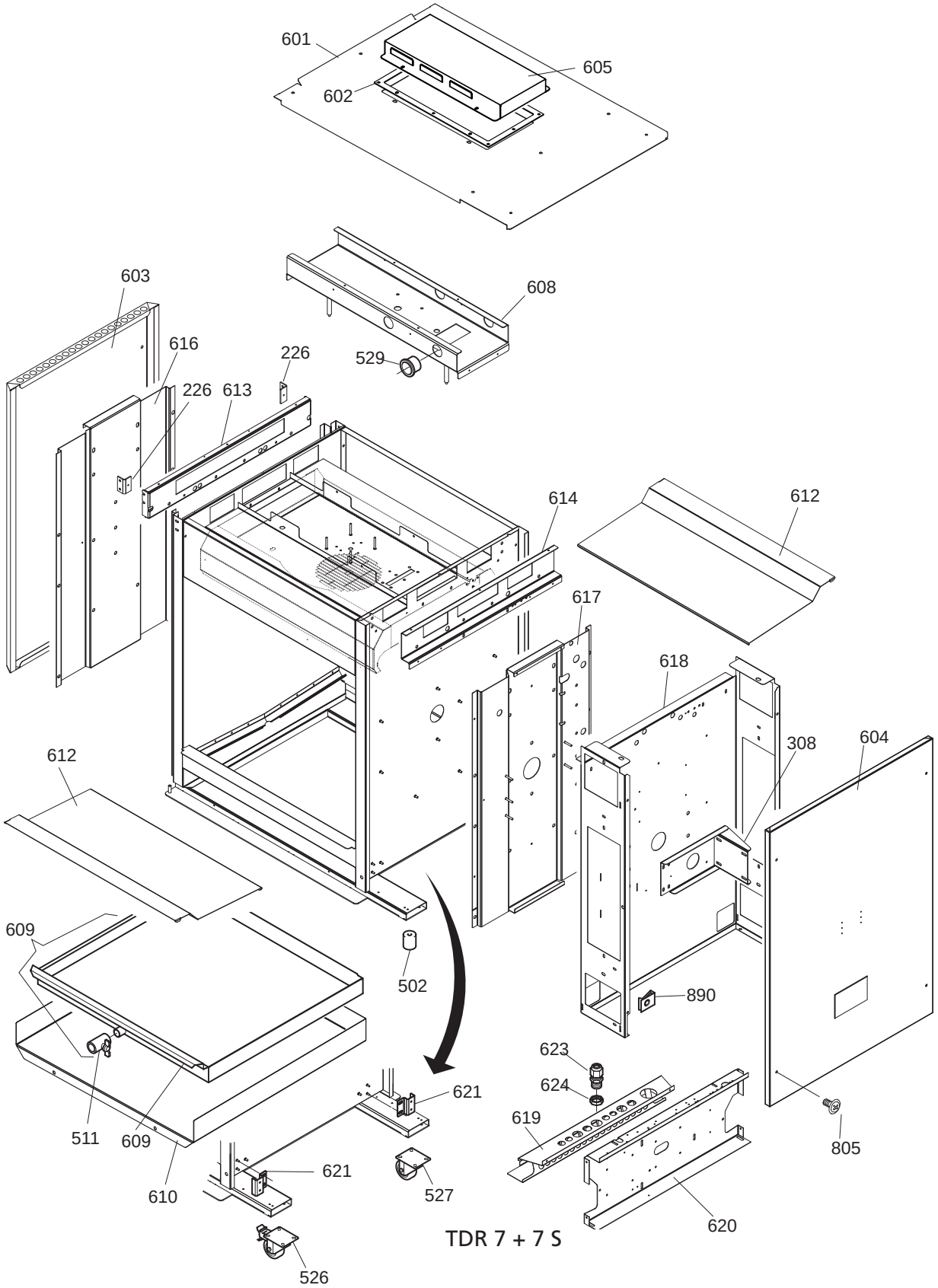

TDR 7 + 7 S

PARTS LIST SHEET METAL

Pos	Part number	Description
226	9174154	Adjusting bracket
308	9290444	Support plate, rotor motor
502	9171125	Leg, rubber 50 mm
511	9171008	Drain-tap with handle
526	9172066	Swivel castor with brake
527	9172065	Swivel castor without brake
529	9171015	Grommet, plastic
601	9294651	Top panel
602	9292082	seal
603	9294180	Side panel, left
604	9294018	Side panel, right
605	9294160	Top cover
606	9294032	Top plate
607	9294045	Cover, electrical compartment
608	9290401	Blower suspension
609	9290405s	Drawer
610	9294041	Grease guard
612	9292062	Drip plate, ss coated
613	9294011	Construction profile, left
614	9294030	Construction profile, right
616	9294028	Reinforcement, side plate, left
617	9294029	Reinforcement, side plate, right
618	9294026	Electrical compartment
619	9294019	Spark catcher
620	9294025	Mounting plate
621	9294065	Bracket, door switch
623	9291040	Strain relief M32 (AWG8)
624	3701068	Nut, strain relief M32 (AWG8)

For fasteners and all other POS numbers above 800, see ‘Fasteners’ on page 56.

UNDERFRAME TDR 7 S

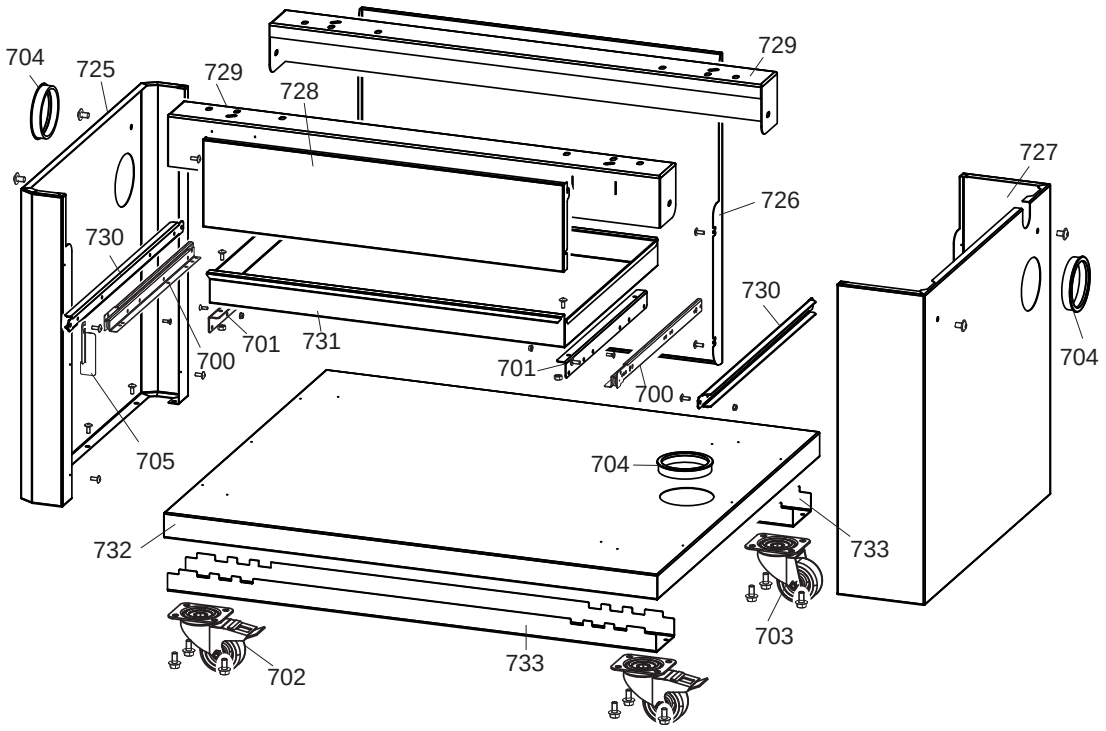

PARTS LIST UNDERFRAME

Pos	Part number	Description
700	9110129	Telescope slide 450mm, set of 2
701	9174667	Support, drawer
702	9172066	Swivel castor with brake
703	9172065	Swivel castor
704	9171141	Grommet 88.4 mm
705	9294432	Blocker, drawer
725	9294302	Side panel, left
726	9294305	Back panel
727	9294301	Side panel, right
728	9294304	Front panel
729	9294307	Suspension beam
730	9294308	Suspension beam
731	9294306	Drawer
732	9294303	Bottom plate
733	9294309	Enforcement beam

FASTENERS

Pos	Part nr	Description
800	4280107	Bolt M6x20 ZP
801	4289559	Lockwasher M6, serrated ZP
802	4288321	Screw M5x16, SS socket button head.
804	4285092	Nut M6, black serrated
805	4288232	Screw M5x12, SS cross recess, wide button head
806	4286713	Bolt M6x16, ZP threadforming
810	4288325	Screw M5x12, SS socket, wide button head
812	9087570	Nut M5, black serrated
814	4289787	Bolt M6x30 ZP
817	4287549	Washer M8, ZP
819	0196673	Bolt M8x25, ZP
820	0141149	Screw M5x16, SS Cross recess pan head
822	0142315	Nut M5, SS hexagonal
824	9191050	Bolt, SS M5x18
825	0142103	Washer M5, SS
826	4280218	Screw M5x45, SS Cross recess pan head
827	4280208	Screw M4x8, SS Cross recess pan head
828	4280215	Screw M5x8, SS Cross recess pan head
829	4280558	Screw M5x16, SS Slotted wide head
830	9192065	Capnut M4, ZP
831	0142129	Washer M4, SS
832	4288231	Bolt M5x10, SS serrated
833	0142307	Nut M4, SS
834	4311110	Washer M5, SS ø5xØ15
835	0142111	Washer M6, SS
836	4285035	Nut M6, Brass
837	0195910	Capnut M6, BNP
838	4285076	Bolt M8x16, SS
841	0147017	Screw M2.5x16, SS Slotted pan head
842	0142293	Nut M2.5, SS hexagonal
843	9191130	starlock washer, 3mm black
845	0141081	Screw pan head, Philips M5x35, A2
846	4288323	Screw M5x20 mushroom head, with flange, 10 pcs
847	9070688	Bolt M8x12, SS
848	9008518	Lockwasher, M8 SS serrated
849	0142292	Nut M3
853	0141050	Screw M3x10, SS Cross recess pan head

Pos	Part nr	Description
854	0141076	Screw M3x20, SS Cross recess pan head
855	0141078	Screw M3x30, SS Cross recess pan head
856	0141035	Screw M3x5, SS Cross recess pan head
858	0141075	Screw M3x16, SS Cross recess pan head
859	4312810	Socket set screw M3x6, SS
861	4285151	starlock washer, 6mm
862	9191041	Circlips, E type for 6mm shaft
863	4287540	Screw M4x10, BNP
864	4285319	Screw 4.8x13, ZP Self drilling and tapping.
866	4287620	Screw 4.2x12, NP self tapping
868	4285078	Nut 1/4" bsw ZP
871	9191049	Set screw M5x5, black
872	4285010	Nut M3, ZP with lockwasher
873	3701248	Spacer 7mm, Ø3.2x6 NP
874	0149296	Spacer 10mm, Ø4.2x8 Nylon
875	9057347	Spacer 10mm, Ø5.2x10 Nylon
876	0141165	Screw M5x25, SS Cross recess pan head
877	4285135	Bolt M5x10, ZP thread forming
878	0137344	Screw M5x30, SS Cross recess pan head
879	4287610	Screw, ZP selftapping 3.5x13
880	9008178	Bolt M5x8, SS
881	0141246	Bolt M6x12, SS
882	0141117	Screw M4x45, SS Cross recess pan head
883	0142365	Locknut M6, ZP
885	4288324	Screw M4x8, SS Cross recess pan head
888	6962153	Washer M6, ZP ø6xØ25
889	6802013	Rivet nut, M5, ZP
890	9172053	Nut M5, for sheet metal
891	4288058	Bolt M5x20, ZP
892	0141521	Nut M6, SS
893	0146987	Washer M8, SS
894	0211520	Bolt M5x12, SS
895	0144359	Locknut M5, SS
896	4285408	Capnut M5, BNP
897	4288320	Screw M5x50, SS hexagonal
898	9073987	Washer M8, SS ø8xØ25
900	9008869	Bolt M8x50, ZP
902	4288319	Screw 6x20, ZP CR threadforming
903	4289402	Lockwasher M8, ZP

Pos	Part nr	Description
904	3701280	Lockwasher, starlock for 10mm shaft
905	0141393	Screw M4x10, SS countersunk
906	0141084	Screw M4x10, SS Cross recess pan head
907	4288327	Screw M5x25, SS Socket pan head
908	9006930	Lockwasher M4, countersunk SS serrated
909	0141092	Screw M4x12, SS Cross recess pan head
910	4287520	Washer M4, Brass
911	4285020	Nut M4, Brass
912	4280128	Bolt M4x12, SS
914	0144347	Locknut M4, ZP
915	8047381	Washer M6, SS ø6xØ25
920	0141547	Nut M8, SS
922	2800066	Connection nut M8x24, ZP
923	4285051	Connection nut M10x30, ZP
925	0195596	Bolt M8x10, ZP Socket head
926	9070793	Connection nut M6x18, ZP
929	0197378	Washer M12, Zp
930	9008056	Nut M12, ZP
931	0142056	Lockwasher M8, SS
933	9077004	Socket set screw M4x6, SS
934	9301049	Circlips external ø25
935	4287557	Washer M10
936	9073149	Wingnut M6, SS
937	2800082	Wingnut M6, Brass Nickle plated
939	4312027	Connection nut M5x15, ZP
940	4280540	Screw M5x6, SS countersunk
941	4311215	Screw , socket head M6 x 30
942	0141123	Screw pan head, Philips M5x10, SS
943	0149299	Spacer, Ø8xø4.2, H15, black
944	0139142	Screw hexagon head M6x40, SS
945	4285410	Capnut M12 SS low profile
946	4286728	Set screw M8x40, socket
947	4280239	Screw M12x20, hexagon ZP
948	0197380	Washer M12, SS
949	0142975	Screw socket head cap M6x20, A2
950	4285120	Screw M4x20, thread rolling
951	8071043	Nut M4, serrated ZP

Pos	Part nr	Description
952	6962187	Washer mudwing repair M8x1.5, Elec. Galv. Steel
953	0197807	Screw M4x30, slotted ZP
954	4285084	Screw 4.8x19, ZP Self drilling and tapping.
955	9008217	Blind rivet 4x8.6
956	9174680	Washer ø5.2xØ20x2mm
957	4285047	nut M8 hexagon, thin DIN 439B
958	0195783	Screw M10x30 sock button head
959	9191108	Wing screw M6x10 SS
960	0141204	Screw M4x16, Pan head SS
961	0149210	Screw M5x6, Pan head
962	0141539	Screw M5x10, SS countersunk
963	4288233	Screw M8x16, ZP serrated
965	4288330	Screw M8x12, SS button head, wide flange
966	4285414	Capnut, M4 ss
967	0149298	Spacer 10mm, Ø3.4x6 Nylon
968	0149299	Spacer 15mm, Ø4.2x8 Nylon
969	0251473	Washer M4, ZP ø4xØ16
970	9087575	Nut M5 hexagon, tensilock A4
971	4280555	Screw M6x16, Brass nickel plated
972	6390168	Rivet nut, M6 ss
973	9261029	Wing screw M5x10 SS
974	0141131	M5x12 kruiskop
975	9008543	Nut M12, SS
976	4280110	Bolt M6x20, SS hexagon head
977	4286723	Hex. screw M8x20 flange thread forming
978	0211521	Screw M5x16, SS hex. Head
979	4285041	Lock nut M5, SS

CIRCUIT DIAGRAM TDR 7 S

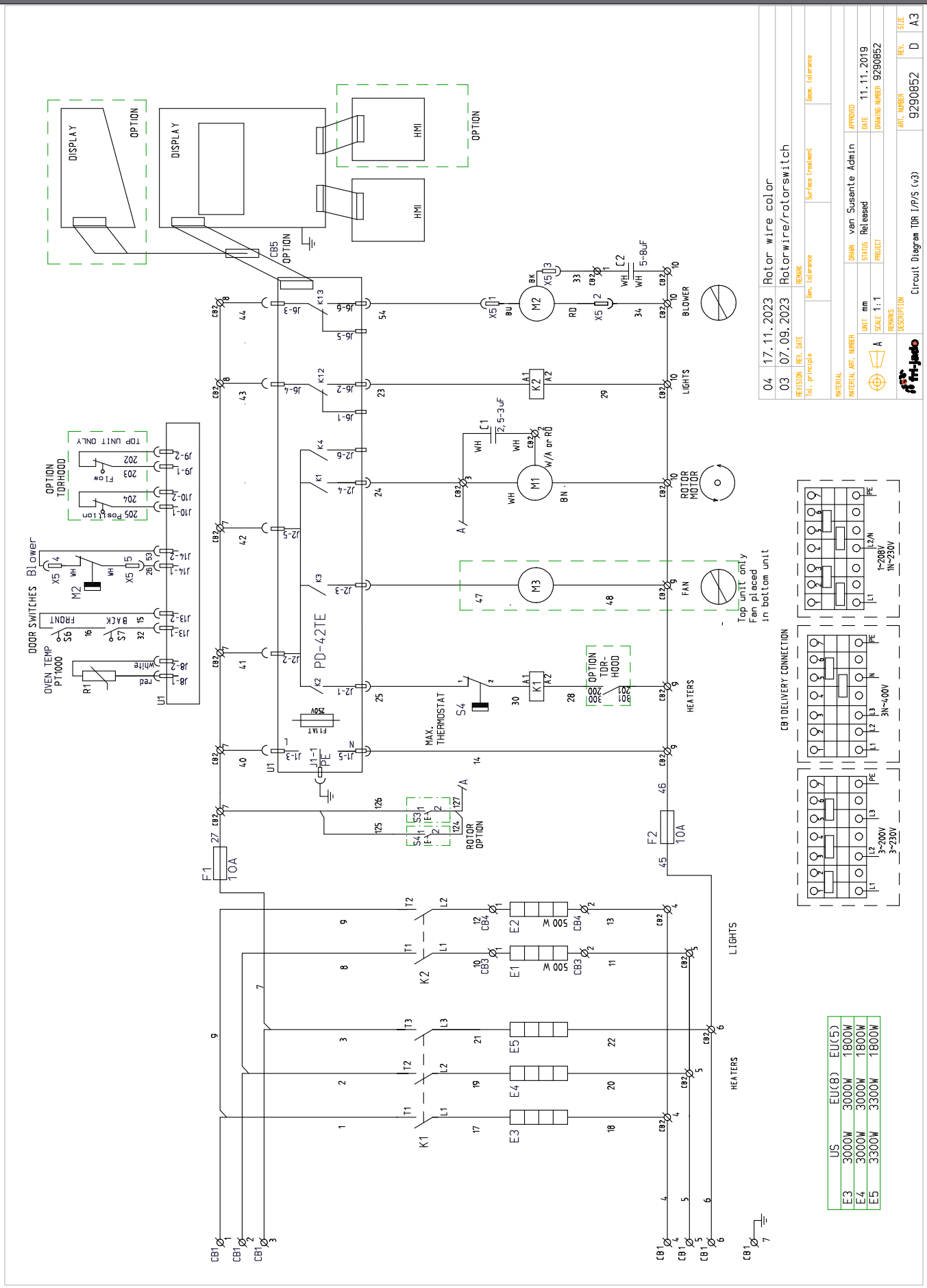

	US	EU(8)	EU(5)
E3	3000W	1800W	
E4	3000W	1800W	
E5	3300W	1800W	

WIRING DIAGRAM TDR 7 S

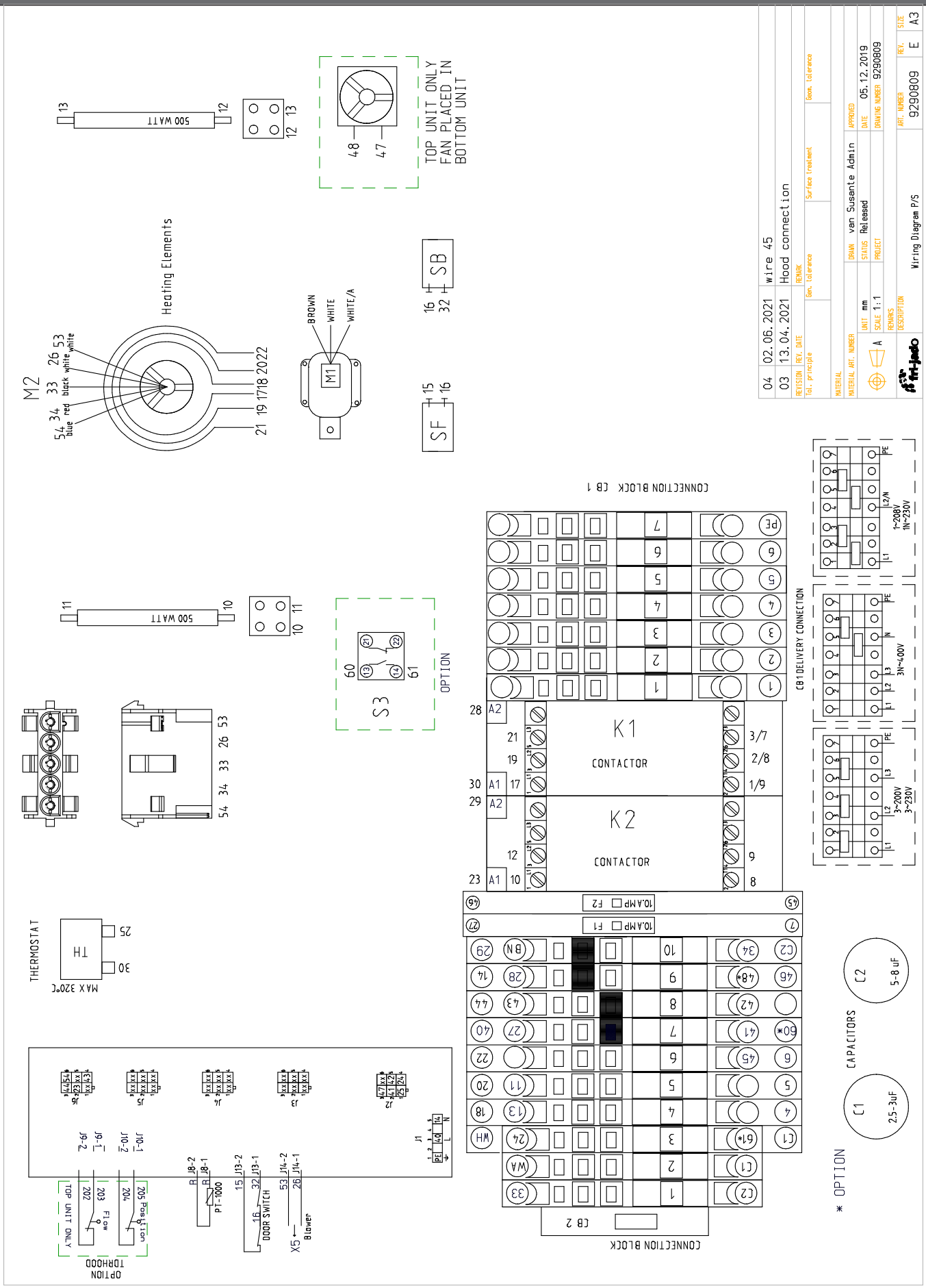

Service kit CPU board S-control WM 9292288s

REPLACING CPU & LCD BOARD

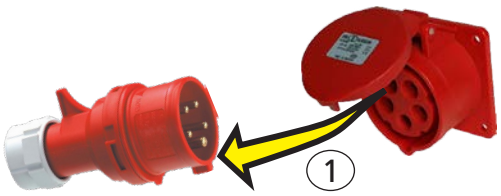

1. Disconnect the power

2. Remove the side panel.

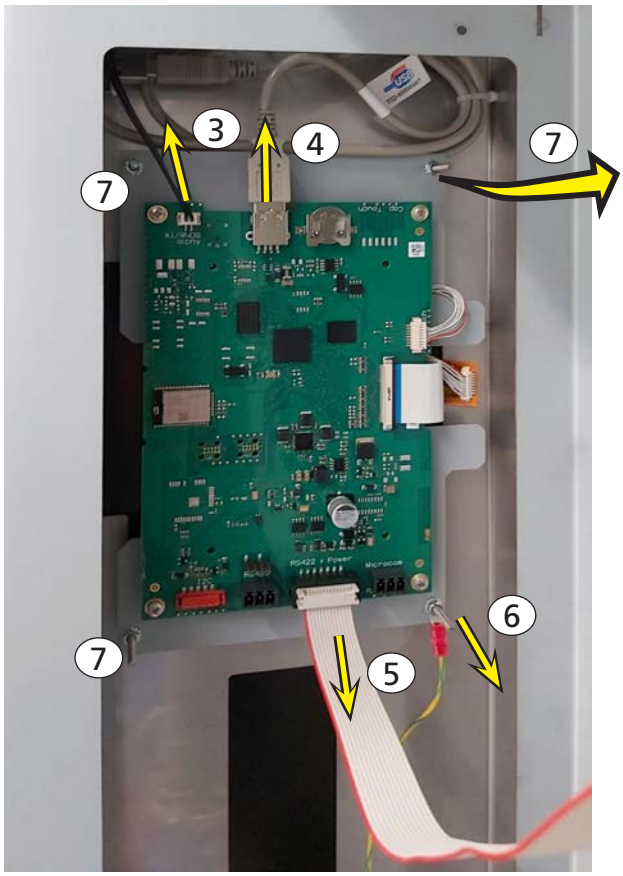

3. Disconnect the plug to the speaker.
4. Disconnect the USB cable.
5. Disconnect the ribbon cable.
6. Unscrew the M3 nut and remove the earth wire.
7. Unscrew the three remaining M3 nuts and remove the CPU board.
8. Install the new CPU board.
9. Check all cables and connections to make sure it is safe to /and reconnect to the mains.

FIRST SETTINGS

After installing the new CPU board it is important to set it to the right device type.

Set the device type in the service settings menu:

1. Make sure the unit is powered on.
2. Touch the screen if it is black and then tap ⏻ to switch ON the unit
3. Swipe up from the bottom of the screen to open the menu.
4. Tap “Settings”

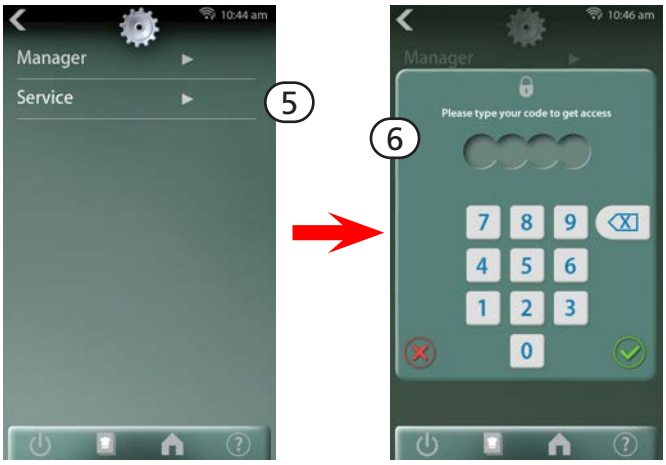

5. Choose “Service”
6. Fill in the pin code 4878

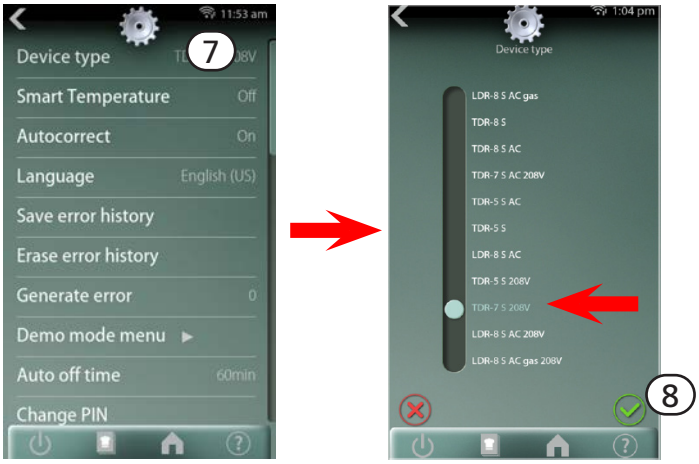

7. Set the “device type”
   Select –> TDR-7 S 208V
8. Confirm by hitting the green check mark.

Also check the data plate for correct device typetype.

PROGRAM THE SERIAL NUMBER

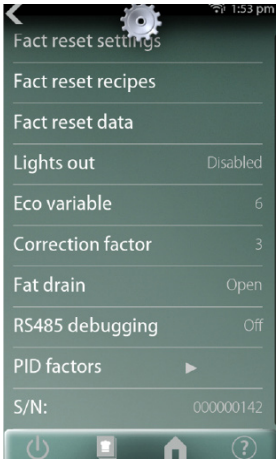

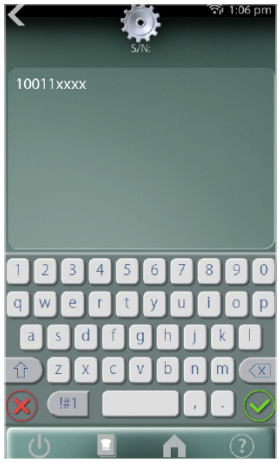

In the service settings menu go to: Factory settings.

Select: S/N as shown and enter the serial number which is on the data plate of the machine.

It's a 9 digit number starting with 100xxxxxx

Press the green check mark to confirm.

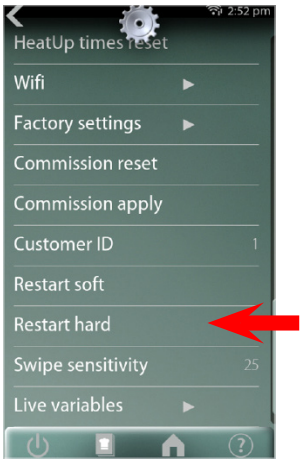

Restart the controller

In the service settings menu go to:
Restart hard and select.

The controller will switch off and do a full restart.

FIRST USE WIZARD

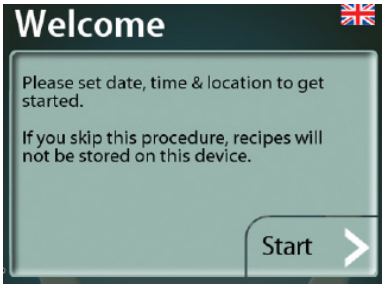

After restart, the First Use Wizard comes up.
If the wizard does not start, go to service settings and select 'Commission reset'. Tap 'Yes' and do another 'Restart hard' as explained on page 62.

Press 'Start'.

Tap the numbers to set the actual day, month and year.

Press 'Next'.

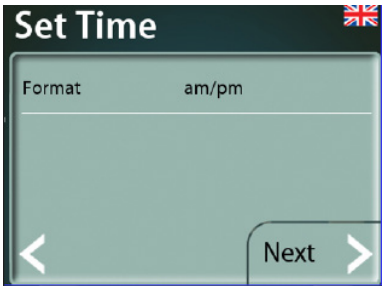

Make sure the format is set to AM/PM.
If 24h is shown tap it and change to AM/PM, hit the green check mark.

Press 'Next'.

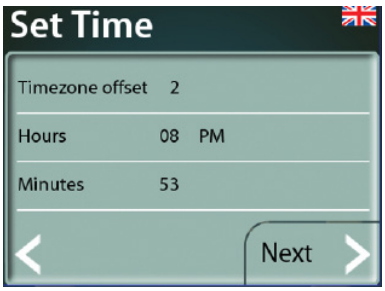

Tap the numbers to set the actual time.

Press 'Next'.

Tap the white area to enter the store number and hit the green Check mark.

Press 'Next'.

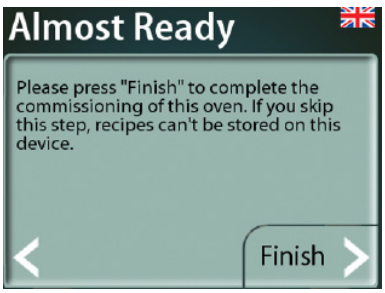

Select Finish, the unit is now ready for use

First use wizard not finished

This icon is visible during the First Use Wizard. If it is visible when the First Use Wizard is not active, do the following steps:

- Make sure that the software version is V1.0.69 or higher. Update if necessary, see 'Updating software TDR S' on page 15.
- Run the First Use Wizard, see instructions on page 63.

CHECKING THE WIFI CONNECTION

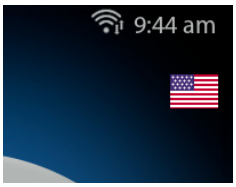

- The Walmart Rotisseries are connected to the internet via a WiFi connection.
- After powerup it can take 1–2 minutes before the connection is made.
- To check the connection, look at the WiFi status icon in the top right of the display.

WiFi status icons

Connected to the WiFi network and connected to the Cloud server.

- All is good, no action required.

Connected to the WiFi network but no communication with the Cloud server.

- Make sure that the software version is V1.0.69 or higher, see 'Updating software TDR S' on page 15.
- Check if the Device type setting is correct, see 'First settings' on page 61.
- Check time and date settings.
- Run the First Use Wizard, see page 63.
- Do a hard restart of the controller: in the service settings menu select Restart hard.
- Check WiFi RSSI; In the service settings select 'WiFi' –> WiFi RSSI.
- The value should be between -85dBm and -25dBm. If it is out of range contact Walmart IoT department.

WiFi activated in the S-controller but not connected to the local WiFi network.

- Make sure that the software version is V1.0.69 or higher, see 'Updating software TDR S' on page 15.
- Make sure that the Device type setting is correct, see 'First settings' on page 61.
- Do a hard restart of the controller: in the service settings menu select Restart hard.

No WiFi icon

WiFi is not activated in the S-controller

- Make sure that the software version is V1.0.69 or higher. Update if necessary, see ‘Updating software TDR S’ on page 15.
- Make sure that the Device type setting is correct, see ‘First settings’ on page 61.
- Make sure that WiFi is enabled in the service settings.
- If disabled, select WiFi Cloud and change the setting to Enabled. Confirm with the green check mark.

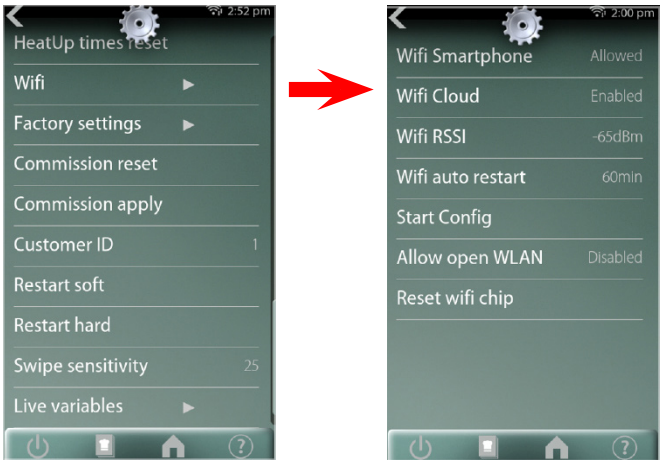

Check if WiFi Cloud is set to Enabled.

- Do a hard restart of the controller: in the service settings menu, select Restart hard.
- If, after these actions the WiFi icon does not show, or if WiFi options are not available in the service settings replace the S-controller (P/N 9292288s).

For technical support call: +1 877 374 5236

fri-jado

Fri-Jado Inc. • 1401 Davey Road • Suite 100 • Woodridge IL 60517 • USA • fax +1 630 689 1424

us.info@frijado.com • www.frijado.com • USA • toll free 877-FRI-JADO