LDR 8 S AC

Service manual, from serial number: 100134710
400V- EU / RoW

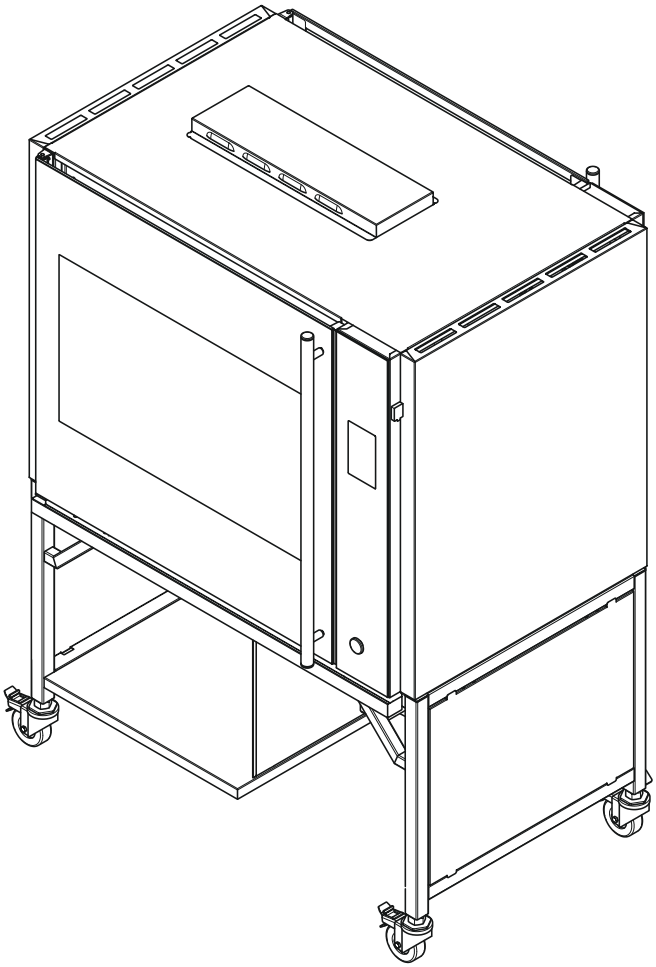

Document number: 500018421

Copyright

All rights to copyrights, registered trademarks, and trademarks reside with their respective owners. Part of this publication may be reproduced, transmitted, transcribed, stored in any retrieval system, or translated into any human or computer language by any means or in any form for the user's own use.

Contents

1 About this document 7
1.1 About the unit in this document 7
1.2 Function of this document 7
1.3 Revision information 7
1.4 Conventions 7
1.4.1 Language 7
1.4.2 Illustrations 7
1.4.3 Units of measurement 7
1.4.4 Signal words used in the document 8
1.4.5 Symbols used in the document 8
1.4.6 Typographical conventions 8
1.5 How to use the document 8
1.6 Related documents 8
1.7 Abbreviations 9
1.8 Terminology 9
1.9 Orientation agreements 9
1.10 Disclaimer 9
1.11 Disclaimer and use of glass 10
1.12 Warranty 10

2 Safety 11
2.1 Intended use 11
2.2 Liability 11
2.3 Approved service engineer 11
2.4 General safety instructions 11
2.4.1 Eye and face protection 11
2.4.2 Skin protection 12
2.4.3 Respiratory protection 12
2.5 Safety instructions for the unit 12
2.6 Safety instructions for service 12
2.7 Signs on the unit 12
2.8 Location of signs on the unit 13
2.9 Discard the unit or the unit parts 13

3 Description 14
3.1 Name plate 14
3.2 Contact information 14
3.3 Overview of the connections 15
3.4 Locations for access to the parts 16

3.5 Overview of the parts - right side....17
3.6 Overview of the parts - left side....18
3.7 Overview of the parts - inside (without fan plate)....19
3.8 User interface....19
3.8.1 Manager settings....19
3.8.2 Service settings....21
3.8.3 Change the manager PIN code....29
3.8.4 Change the settings....29
3.8.5 Change the audio settings....29

4 Transport....30
4.1 Move the unit....30

5 Storage....31
5.1 Put the unit in storage....31

6 Maintenance....32
6.1 Maintenance schedule....32

7 Maintenance procedures....33
7.1 Clear an error message....33
7.2 Copy data with the USB flash drive....33
7.3 Updating the software....33
7.4 Order parts....33
7.5 Adjust the water level....34
7.6 Access to the parts....34
7.6.1 Remove the side panels....34
7.6.2 Install the side panels....34
7.6.3 Remove the top panel....35
7.6.4 Install the top panel....35
7.6.5 Remove the fan plate....35
7.6.6 Install the fan plate....36
7.7 Checks....36
7.7.1 Do a check of the water level during cleaning....36
7.7.2 Do a check of the spray arm....37
7.7.3 Do an I/O test....37
7.8 Measurements....37
7.8.1 Measure the heating element....37
7.8.2 Measure the blower....39
7.8.3 Measure the capacitor....40
7.8.4 Measure the rotor motor....40
7.8.5 Measure the temperature sensor....42

7.8.6 Measure the motor valve....43
7.8.7 Measure the AC pump....44
7.8.8 Measure the water level....45
7.9 Part replacement....45
7.9.1 Remove the blower....45
7.9.2 Install the blower....45
7.9.3 Remove the heating element....46
7.9.4 Install the heating element....46
7.9.5 Remove the rotor motor....47
7.9.6 Install the rotor motor....47

8 Troubleshooting....49
8.1 General troubleshooting procedure....49
8.2 Troubleshooting table....49
8.3 Error messages....62

9 Technical data....64
9.1 General specifications....64
9.2 Dimensions....64
9.3 Mass....64
9.4 Electrical specifications....64
9.5 Ambient conditions....64
9.6 Noise level....65

10 Spare parts....66
10.1 E-panel....66
10.2 Cables....68
10.3 Panels....70
10.4 Doors....72
10.5 Rotor....73
10.6 Blower and heating....75
10.7 Cartridge holder....76
10.8 Cleaning system....77
10.9 Cleaning system - Hoses....79
10.10 Cleaning system - Filtration....81
10.11 Cleaning system - Drainage....81
10.12 Sheet metal - Outside....84
10.13 Insulation....85
10.14 Under frame....87
10.15 Accessories....88
10.15.1 Rotisserie accessories....88

11 Appendix.....89
11.1 Hydraulic diagram.....89
11.2 Overview of the printed circuit board.....90
11.3 Circuit diagram.....91
11.4 Wiring diagram.....92

1 About this document

1.1 About the unit in this document

This document is applicable to this unit: LDR 8 S AC.

Note: For the identification of the model type, refer to the name plate.

1.2 Function of this document

This document has the information and instructions for the approved service engineer to do service on the unit.
For the requirements of the approved service engineer, refer to section *2.3*.

1.3 Revision information

Version	Date	Description
001	October, 2026	Initial version

1.4 Conventions

1.4.1 Language

The original instructions of this document are in English (EN-US). All other language versions are translations of the original instructions.

1.4.2 Illustrations

The illustrations in this document show a typical unit with related parts. Small differences between the illustrations and your unit are possible. These differences do not have an effect on understanding the information in this document. The illustrations are for instruction and description only.

1.4.3 Units of measurement

SI units (international metric system) are used in this document for the measurable parameters of the unit. All other possible units of measurement are conversions of the SI units. If the document has other units measurement, these are between parentheses after the SI unit, or in different columns in a table.

1.4.4 Signal words used in the document

Signal word	Meaning	Symbol
Warning	Injury or death is possible, if you do not obey these instructions	
Caution	Damage to the unit or equipment is possible, if you do not obey these instructions	
Note	More information	

1.4.5 Symbols used in the document

Symbol	Description
	Preliminary requirement: supplies and consumables that are necessary for a procedure
	Preliminary requirement: condition of the unit before you start the procedure
	Preliminary requirement: support equipment or tools that are necessary for a procedure

1.4.6 Typographical conventions

If the sequence is important, the lists and steps in procedures have numbers (123) or letters (abc).

1.5 How to use the document

1. Make sure that you know the structure and contents of this document.
2. Specially read the safety chapter and make sure that you know all the instructions.
3. Do the steps in the procedures fully and in the correct sequence.

1.6 Related documents

Document name	Document code	Target group
Installation manual		Installation engineer
Service manual		Service engineer
Appendix		Service engineer
General Terms and Conditions for Sales and Delivery		All users

1.7 Abbreviations

Abbreviation	Definition
LDR	Large Deli Rotisserie
AC	Auto Clean

1.8 Terminology

Term	Definition
Food product	A food product is a product that is intended for human consumption.

1.9 Orientation agreements

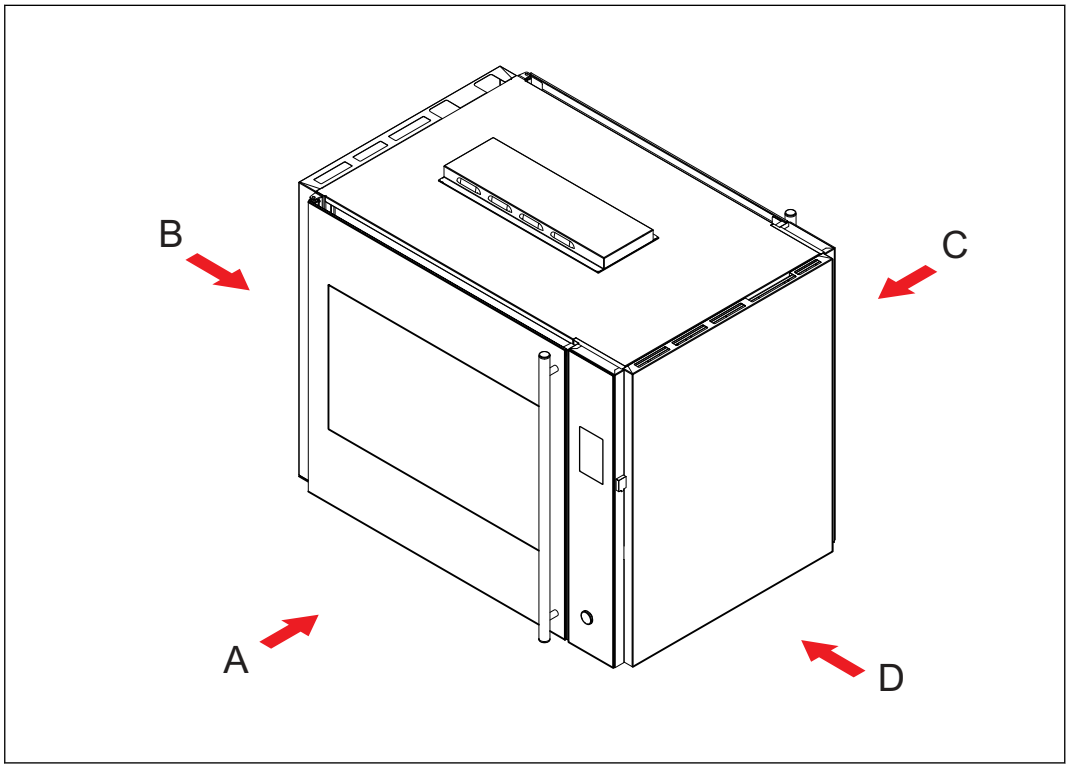

A Front side
B Left side
C Rear side
D Right side

1.10 Disclaimer

Fri-Jado reserves the right to change the document without the obligation to notify any person.

1.11 Disclaimer and use of glass

This unit contains components made of tempered glass. Although tempered glass is designed to withstand increased mechanical stress, it remains susceptible to breakage if handled improperly, subjected to point loads, impact, or thermal stress.
When performing service or maintenance work on this unit, the user must at all times wear appropriate personal protective equipment, including but not limited to:

1. Protective gloves
2. Eye protection (safety glasses)

The glass must be handled with extreme care. Avoid impacts, dropping, twisting, or contact with hard or sharp surfaces. When the glass is removed, placed aside, or stored, it must be positioned only on a protected surface, preferably:

1. a soft cloth, or
2. cardboard, or
3. another flat, shock-absorbing material.

Failure to comply with these safety instructions may result in glass breakage or shattering, which can lead to personal injury and/or damage to the unit. The manufacturer accepts no liability for damage or injury resulting from improper handling or failure to follow these instructions.

1.12 Warranty

Fri-Jado advises you to refer to the supplier for the warranty.

2 Safety

2.1 Intended use

The machine is used to prepare food products. If you use the unit for a different function, this is misuse.

2.2 Liability

The supplier accepts no liability whatsoever for loss or injury caused by failing to strictly adhere to the safety guidelines and instructions in this manual or due to carelessness and misuse during installation, operation, maintenance and repair of the unit referred to in this manual and any of its accessories.
In case of unauthorized modifications in or on the unit, every liability on the part of the supplier becomes null and void.

2.3 Approved service engineer

- The approved service engineer knows the unit and its safe maintenance.
- The approved service engineer obeys all local rules and the instructions in the maintenance manual.

2.4 General safety instructions

Note: This document, the related documents, and the warnings included do not replace your responsibility to use your common sense when you do work on the unit.

- Keep this document in a safe place for future use.
- Only do the procedures that the related documents show and that you are approved for.
- Do not make changes to the unit without the written approval from the supplier.
- Obey all the preliminary requirements of the procedures.
- Put on the correct personal protective equipment.
- Do not use the unit when a safety device or a cover is removed, does not operate, or if you think that it does not operate.
- If you remove safety devices, make sure that you install the safety devices again before operation.
- Obey the local rules and the instructions in this document. If the local rules do not agree with the instructions in this document, the local rules will apply.
- Keep the unit in good condition. Make sure that defective parts are replaced immediately.
- Keep the working area of the unit clean.
- Make sure that at least two brakes on the wheels are applied.
- Make sure that the unit is electrically grounded.

2.4.1 Eye and face protection

- Wear closed safety glasses. Refer to EN 166.

- Make sure that eye wash fountains are available in the vicinity of any potential exposure.

2.4.2 Skin protection

- Wear suitable protective clothing. Refer to EN ISO 13688.
- During cleaning, wear resistant protective gloves. Replace the gloves after each use and when the gloves have signs of wear of perforation.
- After operation, use thermal insulated gloves when you remove the accessories from the unit.

2.4.3 Respiratory protection

- In case of insufficient ventilation, wear suitable respiratory equipment.

2.5 Safety instructions for the unit

Note: You can refer to the Safety Data Sheet of ProteClean (daily clean) and RotiShine (descale) in the resource library.

2.6 Safety instructions for service

- Make sure that you are an approved service engineer.

2.7 Signs on the unit

Warning: Do not remove the signs from the unit.

Warning: If a sign on the unit has damage, make sure to replace the sign immediately.

Symbol	Name of the sign	Step to decrease the risk of injury
	Hot surface	Do not touch this surface.
	High voltage	Set the unit to standby mode. Disconnect the power supply before you open the technical area.

2.8 Location of signs on the unit

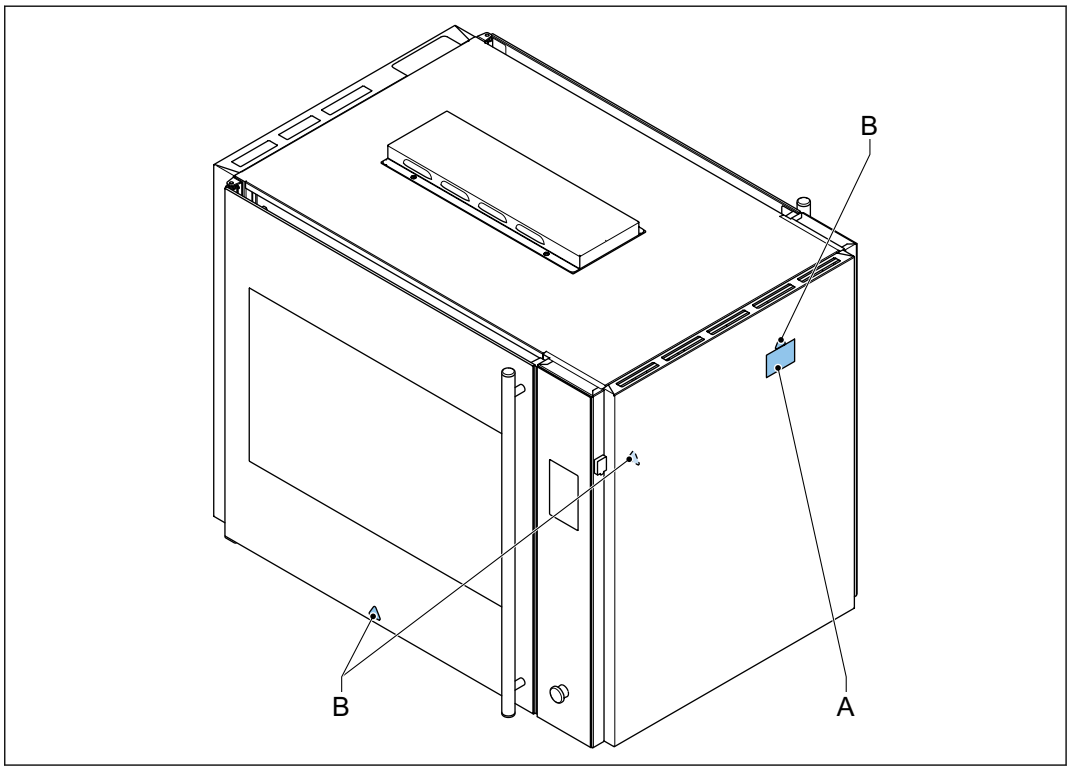

A Name plate B Safety sign

2.9 Discard the unit or the unit parts

- Obey the local rules to discard the unit, parts, or consumables.

3 Description

3.1 Name plate

A Name of manufacturer and QR code
B Unit data
C Quality data

3.2 Contact information

Note: The supplier is the first point of contact. Refer to the supplier.

3.3 Overview of the connections

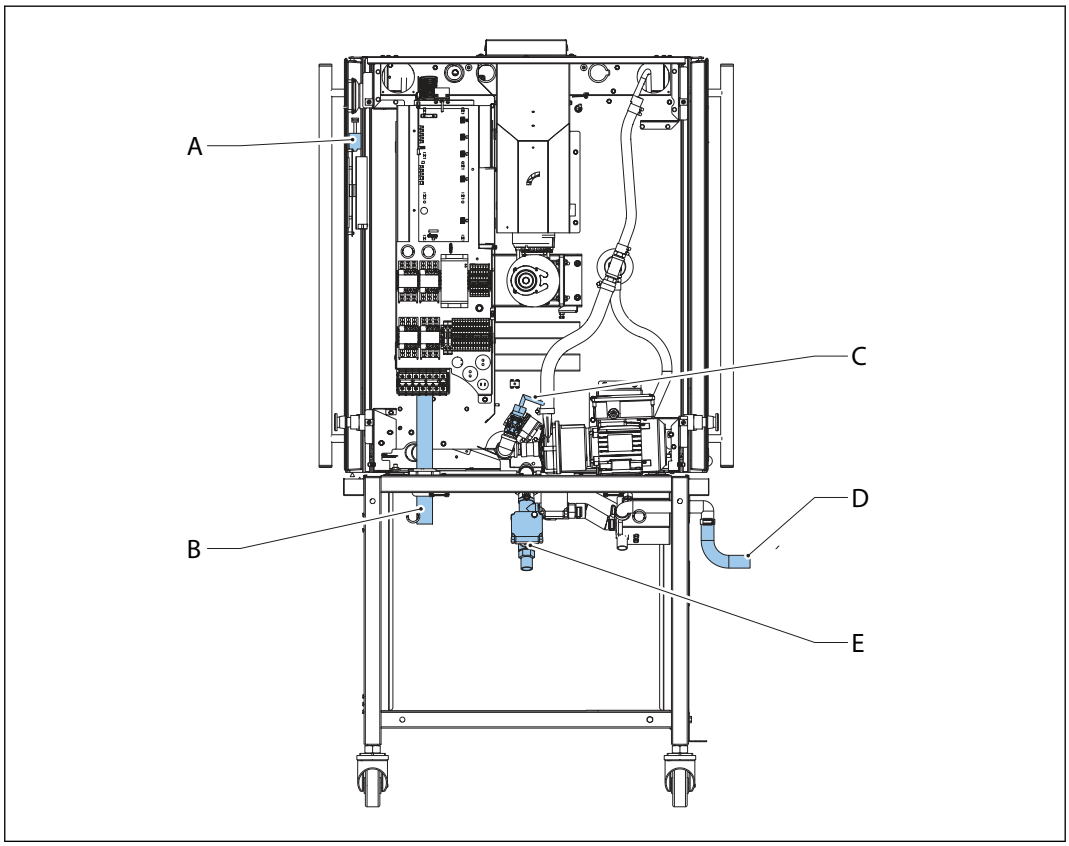

A	USB port	D	Drain connection
B	Power connection	E	Grease outlet
C	Water connection		

3.4 Locations for access to the parts

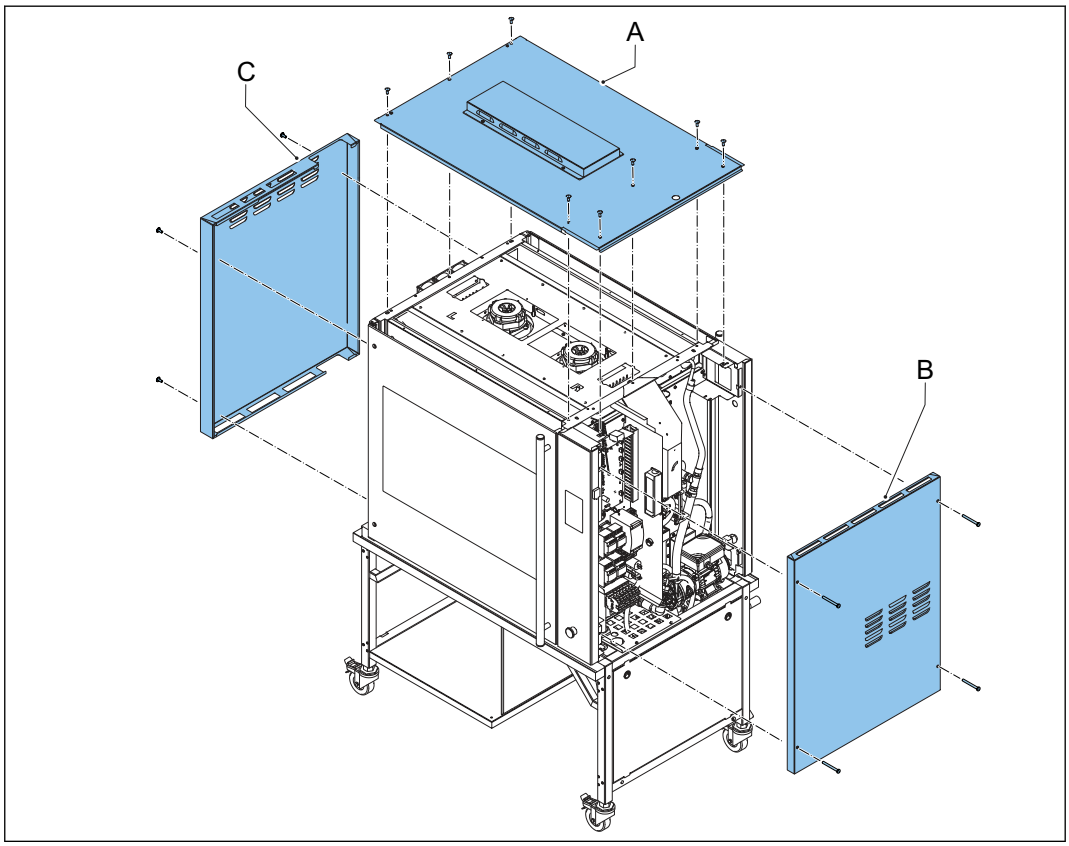

A Top panel
B Right panel
C Left panel

3.5 Overview of the parts - right side

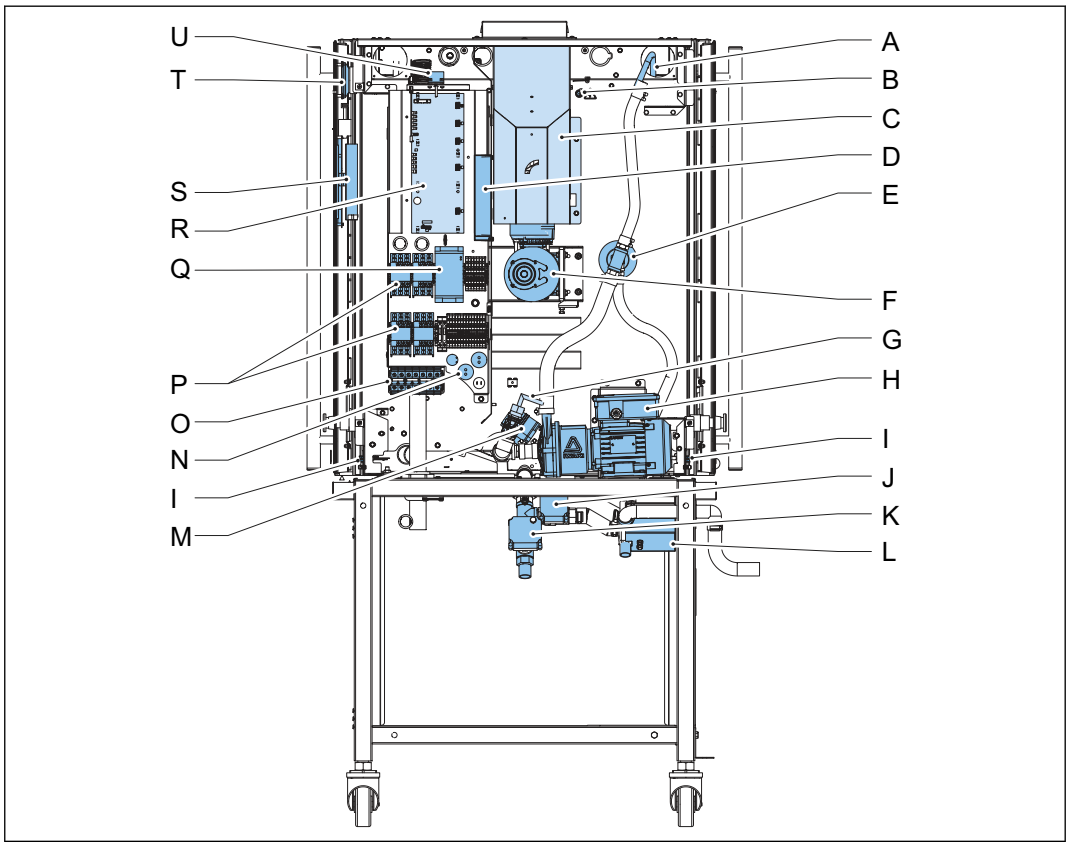

A	Spray connection	L	Drain pump
B	Temperature sensor (PT 1000)	M	Motor valve of the suction side
C	Air guides	N	Capacitors
D	LED driver	O	Mains connection block
E	Spray arm connection	P	Contactors
F	Rotor motor	Q	Power supply + 24 V DC
G	Water inlet valve	R	I/O board
H	Pump	S	Touchscreen and CPU board
I	Door switch	T	Speaker
J	Motor valve of the water drain	U	High limit thermostat
K	Motor valve of the grease drain		

3.6 Overview of the parts - left side

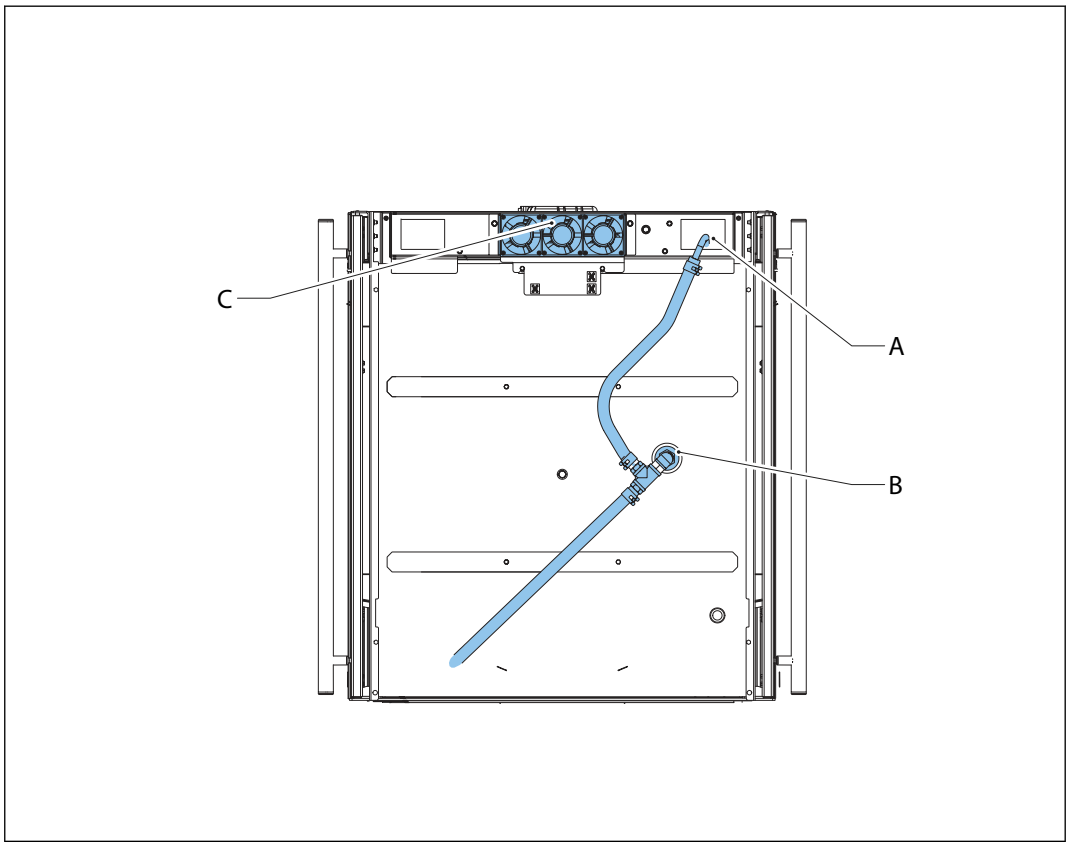

A	Spray connection	C	Cooling fans
B	Spray arm connection		

3.7 Overview of the parts - inside (without fan plate)

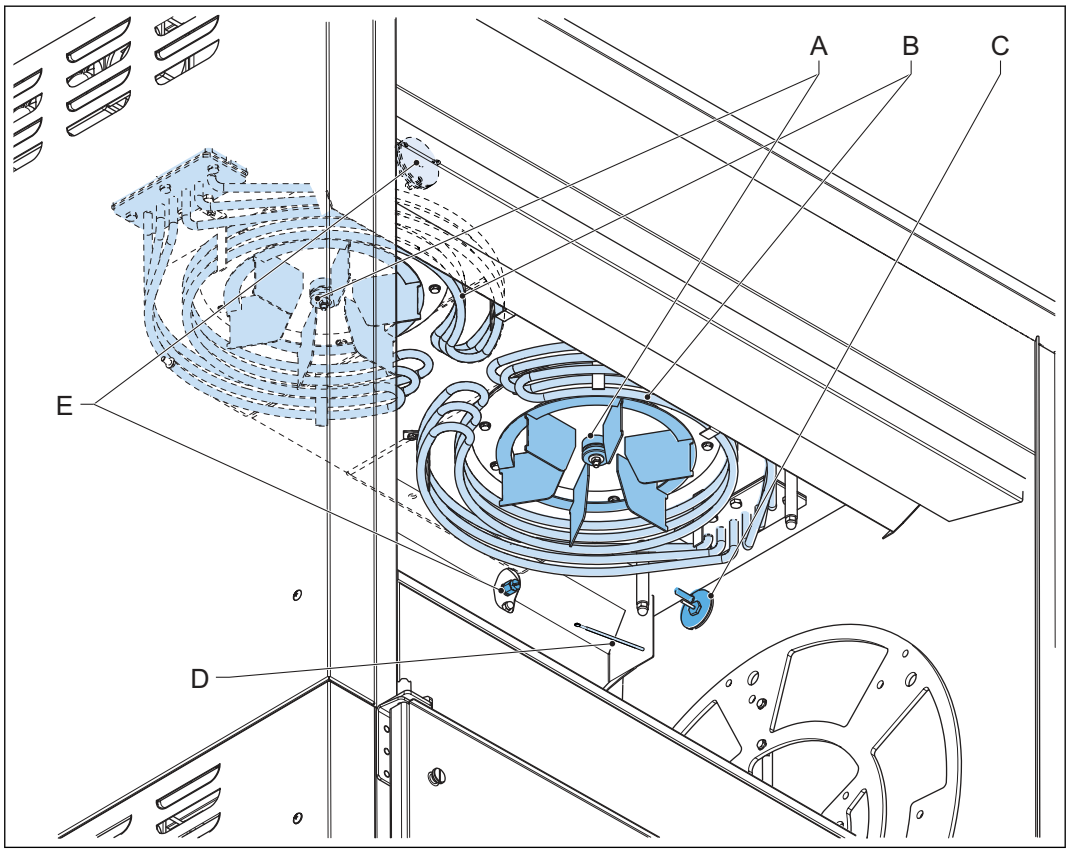

A	Blower with blower fan	D	High limit capillary (outside the cavity between insulation and sheet metal)
B	Heating element		
C	Temperature sensor (PT1000)	E	Top sprayer nozzle

3.8 User interface

3.8.1 Manager settings

Note: If applicable, you can use the PIN code to get acces to the manager settings: 1111.

Note: For the default settings, refer to the relevent and latest settings list.

Menu (Level 1)	Menu (Level 2)	Description
Change PIN		To change the pin code for the manager.
Toggle light		To set the interior light to on or off.
Temperature unit		To set the temperature unit. [C, F]

Menu (Level 1)	Menu (Level 2)	Description
Volume unit		To set the volume unit. [Liters,Gallons]
UTC Time	Hours	To set the hours of the local time. [0–23]
	Minutes	To set the minutes of the local time. [0–59]
UTC Date	Year	To set the years of the date. [2020–2050]
	Month	To set the months of the dates. [1–12]
	Day	To set the days of the date. [1–31]
Timezone offset		To set an offset to the local timezone. [-12–12]
Time format		To set the time format. [24h, AM/PM]
Date format		To set the date format. [D/M/Y, M/D/Y]
Start delay recipe		To set the start a recipe with a delay. [Off, On]
Alarm		To set the alarms to on or off. [Off, On]
End-user recipe editing		To enable the user to change and save recipes. [No, Yes]
Ask weight		To set the ask weight question. [Off, On]
Preheat mode		To set the preheat mode. [No, 1x, Continue] !x: one time at the beginning of the day Continue: at the beginning of each recipe
Preheat temp default		To set the default preheat temperature. [50–150 C]
Eco function		To set the eco function to on or off. [Off, On] The eco function saves energy to use latent heat at the end of the recipe.
Audio	Audio setting	To set the audio tone. [1–11]
	Audio factor	To set the volume of the audio. [1–100]
	Test audio	To do a test of the current audio settings.
	Sound set	To set the audio sound. [Marimba, Bell, Beeper]

Menu (Level 1)	Menu (Level 2)	Description
Keyboard beep		To set the sound when you use the touchscreen to on or off. [Off, On]
Filter capacity		To set the filter capacity of the used water filter system in relation to the water quality on site. [50–3000, ∞]
Lime filter		To show the filter capacity of the lime filter as a percentage.
Lime filter replaced		To reset the counter when the lime fitler is replaced.
Clean screen time		To set the time for cleaning the touchscreen without a response of the controller. [10–60 seconds]
Store Number		To set the store number.
Reference cook		To select a reference program for cooking correction.
Recipes -> USB		To copy all recipes from the machine to a USB flash drive.
Recipes <- USB		To copy all recipes from a USB flash drive. to the machine.
Add recipes <- USB		To copy selected recipes from a USB flash drive. to the machine.
Cloud setings	Cloud username	To set the username of the cloud.
	Cloud Password	To set the password of the cloud.
Reset hard		To do a hard reset of the unit. [no, yes]

3.8.2 Service settings

Note: You can use the PIN code to get access to the service settings: 4878

Note: For the default settings, refer to the relevant and latest settings list.

Menu (Level 1)	Menu (Level 2)	Menu (Level 3)	Description
Configuration	Device type		To set the correct type of unit.
	R6 output function		To set the R6 output function. [Backflush valve, Heater Safety]
	Pressure sensor		To set the pressure sensor. [Off, On]
	Customer ID		To set the customer ID. [0–9]
	Hood		To set whether the hood is installed. [Off, On]
	Lights out		To set the lights. [Disabled, Enabled]
	Auto off time		To set the unit to off automatically when you do not operate the machine. [1–240]
Smart Temperature			To set the smart temperature function. [Off, On]
Autocorrect			To set the autocorrect function. The autocorrect function adds time to the remaining time based on the quantity of the product and temperature loss.
Language			To set the language of the user interface.
Save error history			To save the error history.
Erase error history			To delete the error history.
Generate error			TBD
Demo mode menu	Demo mode		To set the demo mode of the unit to on or off. [Off, On]
Change PIN	Enter a new pincode		To set the pin code. The default pin code is 1111. If you set the pin code to 0000, it is not necessary to enter a pin code to get access to the manager settings.
Sensor offset			To set the sensor offset. [-30–30]
Cleaning	Cleaning temp	Clean Temp 1	To set the cleaning temperature during cycle 1.
		Clean Temp 2	To set the cleaning temperature during cycle 2.

Menu (Level 1)	Menu (Level 2)	Menu (Level 3)	Description
		Clean Temp 3	To set the cleaning temperature during cycle 3.
		Quick CL Temp	
		Descale Temp	To set the descaling temperature.
		Soap safe temp	To set the safe temperature to cool down before soap can be added at the beginning of the cleaning cycle.
		Cooling temp	To set the temperature before the cleaning cycle starts.
	Cleaning times	Hot rinse time 1	To set the time for hot rinsing step in cleaning cycle 1.
		Hot rinse time 2	To set the time for hot rinsing step in cleaning cycle 2.
		Hot rinse time Q CL	
		Hot rinse time Desc.	
		Cold rinse time 1	
		Cold rinse time 2	
		Cold rinse time Q CL	
		Cold rinse time Desc.	
		Drain time	To set the time for the drain open step in the cleaning cycle.
		Flush time	To set the time for flush step in the cleaning cycle.
		Drain backflush time	To set the time for the drain backflush step in the cleaning cycle.
		Final time	To set the time for the final step in the cleaning cycle.
		Shine rinse time	To set the time for shine rinsing step in the cleaning cycle.
	Clean water supply	Supply time 1	To set time 1 to fill the unit with clean water.

Menu (Level 1)	Menu (Level 2)	Menu (Level 3)	Description
		Supply time 2	To set time 2 to fill the unit with clean water.
		Add water interval	To set the interval time to add water during cleaning.
		Add water time	To set the time to add water during cleaning.
	Clean sanitation	Sanitation step	To set the sanitation step on or off.
		Sanitation time	To set the time for the sanitation step in the cleaning cycle.
		Sanitation temp	To set the temperature during the sanitation step.
	Descale warning		
	Daily clean warning		
	Open door cooling		
	Force cleaning		
	Cleaning options	Quick clean	
		Daily clean	
		Descale	
	Clear cleaning status		
Delete all programs			To delete all recipes.
Hood			To activate the hood (optional)
I/O test	J7 analog in		
	J8 oven temp. in		
	J9 analog in		
	J10 analog in		
	J11 analog in		
	J12 analog in		
	Digital inputs		To read the input of: • the door (J13) • the blower (J14) • the hood filter placement (J15) • the hood filter press diff (J16)

Menu (Level 1)	Menu (Level 2)	Menu (Level 3)	Description
	Digital outputs		To set the output of: • the rotor (M1) • the blower (M2) • the heater (K1) • the lamp (K2) • the water supply (W1) • the backflush water (W2) • the water pumpt (K6) • the drain valve (Q5) • Casco (Q1) • Spray right (Q2) • Spray left (Q3) • the fat drain (Q4)
	Board Feedback		To read the feedback value.
	Board Version		To read the board version.
	Board Variant		To read the board variant.
Test program			To start a cleaning cycle to test the program.
Ignore errors			To ignore errors.
Save HACCP	Start		To save the HACCP log file to a USB flash drive.
HACCP days			To set the amount of days for the HACCP log file.
Params -> USB	Enter filename		To save the parameters to a USB flash drive.
Params <- USB			To load the parameters from a USB flash drive.
Init. Heatup Time			To show the recorded heatup time during initial operation.
Act. Heatup Time			To show the recorded heatup time during the last operation.
HeatUp program			To activate the heatup program and shows the heatup time in seconds.
HeatUp times reset			To reset the heatup times.
Wifi	Wifi Smartphone		To set a connection to a smartphone.
	Wifi Cloud		To set a connection to the Fri-Jado Smart Connect website.

Menu (Level 1)	Menu (Level 2)	Menu (Level 3)	Description
	Wifi RSSI		To show the signal level of the Wifi connection. In practice the values are betwen -85 dBm and -25 dBM. A bad connection is -85 dBm and a very good connection is -25 dBM.
	Wifi auto restart		"If you set a time of >= 5 minutes here, the machine will regularly check whether the WiFi no longer receives messages during the set time interval. In case there was no communication during that time interval, the Wi-Fi communication will be restarted. This is intended to be able to automatically recover any loss of the WiFi connection if there should be long-term problems."
	Start Config		"This allows you to force the machine to start a new cloud configuration. The old WiFi access point data will be deleted at that time and after a few seconds a smart-phone symbol will appear in the top right corner of the status bar on the screen. From the moment that smartphone symbol appears, the user can set the cloud configuration on the machine via the smartphone."
	Allow open WLAN		TBD
Factory settings	Fact reset settings		To reset the setting fo factory settings.
	Fact reset recipes		To reset the setting fo factory recipes.
	Fact reset data		To reset the setting fo factory data.
	Eco variable		To set the eco variable.
	Correction factor		To set a cook correction.
	Fat drain		To drain fat during cooking Open or Auto.

Menu (Level 1)	Menu (Level 2)	Menu (Level 3)	Description
	RS485 debugging		To give information to the developer.
	PID factors	P factor	To set the temperature regulation setting (P = proportional).
		I factor	To set the temperature regulation setting (I = integrating).
		D factor	To set the temperature regulation setting (D = differentiating).
		IMAX factor	TBD
		Relay actions	TBD
	Use factory config.		TBD
	S/N:		TBD
Commission reset			TBD
Commission apply			TBD
Restart soft			This performs a 'soft' reboot of the entire S control software. This means that the entire soft-ware restarts internally without an external electrical reset signal being issued.
Restart hard			This performs a 'hard' (electronic) reboot of the entire S control software, which is similar to turning the unit off and on again.
Swipe sensitivity			To set the sensitivity of the touchscreen.
Live variables	Status counters	Active total	To show the active time of the unit.
		Operation total	To show the total time that the unit was in operation.
		Preheat total	To show the total time that the unit was preheating.
		Reset preheat total	To reset the total preheating time.
		Manuallly added	To show the time that was added manually.
		Reset manual total	To reset the times that were added manually.
		Cook corrections	To show the total time of cook corrections.

Menu (Level 1)	Menu (Level 2)	Menu (Level 3)	Description
		Reset correc-tion	To reset the total time of cook corrections.
	Output counters	Heater	To show the time of heat-er activation.
		Reset heater time	To reset the time of heat-er activation.
		Blower	To show the time of blow-er activation.
		Reset blower time	To reset the time of blow-er activation.
		Rotor	To show the time of rotor activation.
		Reset rotor rime	To reset the time of rotor activation.
		Light	To show the time that the light was on.
		Reset light time	To reset the time that the light was on.
		Pump	To show the time of pump activation.
		Reset pump time	To reset the time of pump activation.
	Start/End counters	#started recipes	To show the quantity of started recipes after the last reset.
		#ended recipes	To show the quantity of ended recipes after the last reset.
		#started quick clean	To show the quantity of quick cleans after the last reset.
		#ended quick clean	To show the quantity of ended quick cleans after the last reset.
		#started daily clean	To show the quantity of started daily cleans after the last reset.
		#ended daily clean	To show the quantity of ended daily cleans after the last reset.
		#started des-cales	To show the quantity of started descales after the last reset.
		#ended des-cales	To show the quantity of ended descales after the last reset.
		Reset Starts/ Ends	To reset all starting and ending counters.

Menu (Level 1)	Menu (Level 2)	Menu (Level 3)	Description
	UTC system time		To set the time and date.
	Commission time		To show the time and dat of commissioning.
	Limefilter time		To show the last installa-tion time and date of the water filter.

3.8.3 Change the manager PIN code

Note: If you change the manager PIN code, you must enter the PIN code every time that you access the manager settings. The default manager PIN code is 1111. You can set the manager PIN code to 0000 to stop asking for the PIN code when you access the manager settings.

1. Go to the menu *Change PIN* in the manager settings to change the PIN code for the manager settings. You can use the PIN code to get acces to the manager settings: 0000.

3.8.4 Change the settings

Note: You must use a password to get access to the settings for *Manager* and *Service*.

1. Swipe up to go to the swipe up screen.
2. Select *Settings*.
3. For manager, select *Manager*. Refer to section Manager settings.
4. For service, select *Service*. Refer to section *3.8.2*.

3.8.5 Change the audio settings

1. Go to *Settings* > *Manager* > *Audio*.
2. Select *Audio settings* to select the audio sound.
3. Select *Audio factor* to set the volume.
4. Select *Test audio* to test the audio set and volume.
5. Select *Sound set* to select the sound set. *Beeper* has the highest volume.

4 Transport

4.1 Move the unit

Warning: Do not move the unit over objects higher than 10 mm.

1. Disconnect the power supply.
2. Make sure that the unit is cooled down. Wait a minimum of 10 minutes.
3. Disconnect the water supply.
4. Disconnect the drain.
5. Remove the grease container.
6. Make sure that the wheels can move freely.
7. Push the unit at the center.

5 Storage

5.1 Put the unit in storage

1. Disconnect the power supply.
2. Disconnect the water supply.
3. Remove water from the water valve, tubes and the pump.
4. Clean the unit.
5. Put a cover over the unit to prevent dust on the unit and water leakage.
6. Store the unit in a dry non-condensing environment (10–32 °C) .
7. Apply the breaks on the wheels of the unit.

6 Maintenance

6.1 Maintenance schedule

Task	Interval	Procedure
Preventive maintenance	Yearly	Do a check of the machine. Replace wearable components according to the maintenance program of the machine. Refer to the resource library: *https://resource-library.frijado.com/en_us/*.

7 Maintenance procedures

7.1 Clear an error message

Caution: Make sure that you analyze the error message and do the necessary actions before you clear the error message.

1. Go to *Log & maintenance*.
2. Select the error message to see the data of the error message.
3. Go to *Settings* > *Manager*.
4. Select *Clear last error*.
5. Select *OK*.

7.2 Copy data with the USB flash drive

Note: If you copy the parameter list to the unit, the current settings will be overwritten.

1. Go to *Settings* > *Service*.
2. Select *Params -> USB* to copy the parameter list from the unit to the USB flash drive.
3. Select *Params <- USB* to copy the parameter list from the USB flash drive to the unit.

7.3 Updating the software

The software is a ZIP file. The name of the file contains the version of the software.

Note: For the latest software and settings list, go to: *https://resource-library.frijado.com*.

1. Fill in 'S-control-software' in the search field.
2. Select the correct file to download.
3. Extract the ZIP file.
4. Copy the files to a USB flash drive.
5. Disconnect the power supply.
6. Put the USB flash drive in the USB port.
7. Connect the power supply. The update starts.
8. When the update is complete, remove the USB flash drive from the USB port.

7.4 Order parts

1. Contact the supplier.

7.5 Adjust the water level

1. Go to *Settings* > *Service* > *Cleaning* > *Clean water supply* to change *Supply time 1* and *Supply time 2*. For the latest default value parameters, refer to the parameter list.

7.6 Access to the parts

7.6.1 Remove the side panels

1. Loosen the screws of the right panel (B).
2. Remove the screws of the left panel (A).
3. Remove the side panels.

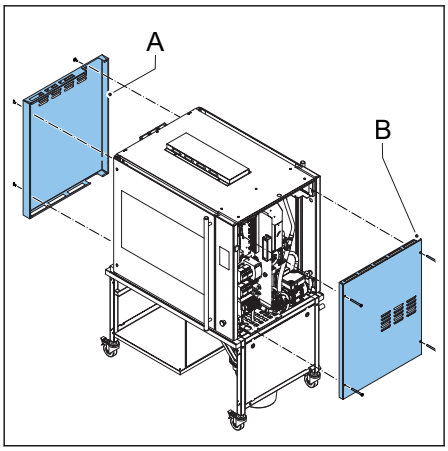

7.6.2 Install the side panels

1. Hold the side panels against the unit.
2. Tighten the screws of the right panel (B).
3. Tighten the screws of the left panel (A).

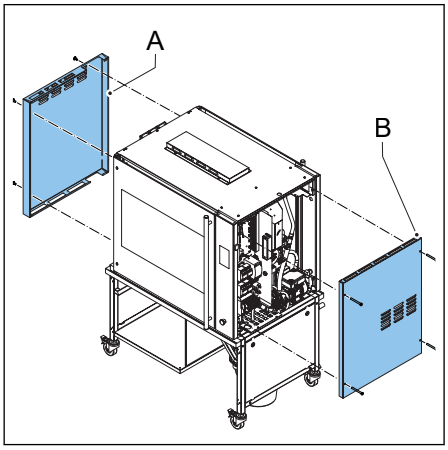

7.6.3 Remove the top panel

1. Loosen the screws of the top panel (A).
2. Remove the top panel (A).

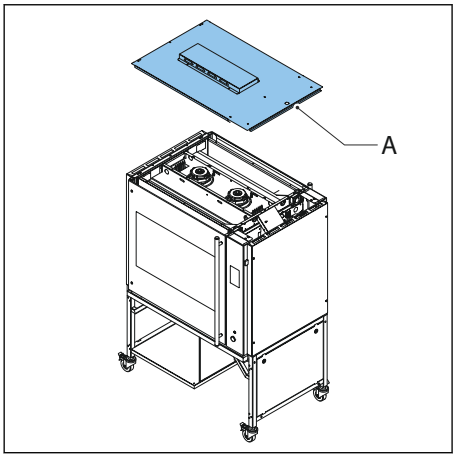

7.6.4 Install the top panel

1. Put the top panel (A) on the unit.
2. Tighten the screws of the top panel (A).

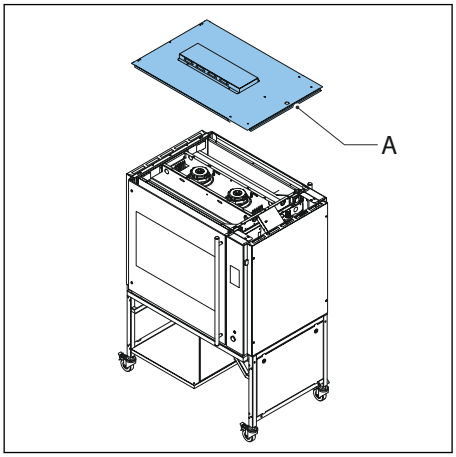

7.6.5 Remove the fan plate

1. Loosen the four nuts (A).
2. Move the fan plate (B) sideways.
3. Remove the fan plate (B).

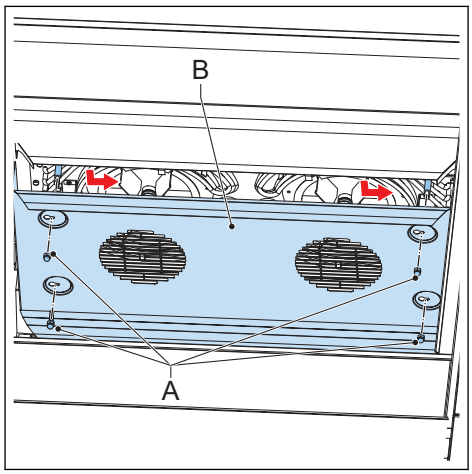

7.6.6 Install the fan plate

1. Install the fan plate (B) over the nuts (4x) (A).
2. Move the fan plate (B) sideways.
3. Tighten the nuts (4x) (A).

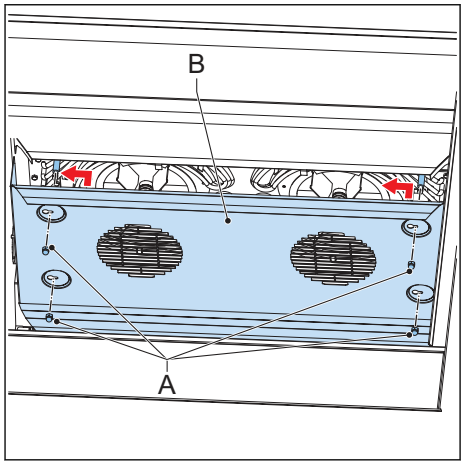

7.7 Checks

7.7.1 Do a check of the water level during cleaning

Warning:
Do not add cleaning agents for this procedure. Injury can occur.

During cleaning, water flows into the rotisserie. If there is too much water, this will reduce the wash power of the detergent. If there is not enough water, this can cause insufficient cleaning and damage to the pump.
Low water levels can occur when the water pressure is too low.

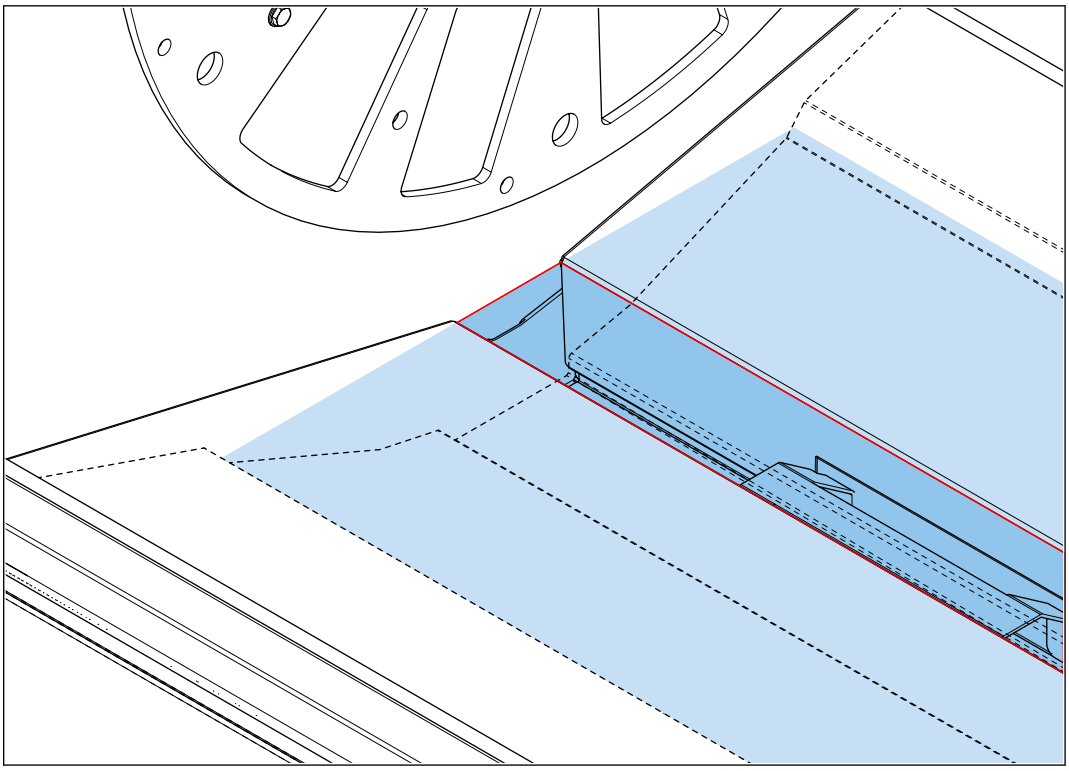

1. Start the daily clean.
2. Let the daily clean run for 6 minutes.

3. Pause the daily clean.
4. Open the door.
5. Measure the water level. Refer to section .
6. If it is necessary, adjust the water level. Refer to section *7.5*.

7.7.2 Do a check of the spray arm

1. Make sure that the spray arm is clean.
2. Make sure that the spray arm can move freely.

7.7.3 Do an I/O test

1. Go to *Settings* > *Service* > *I/O test*.
2. Select the applicable I/O test.
3. For *Digital outputs*, select the toggle switch to activate or deactivate the output.

7.8 Measurements

7.8.1 Measure the heating element

Note: If the heating element is stored for a longer period of time, moisture can go in and the insulation resistance can decrease.

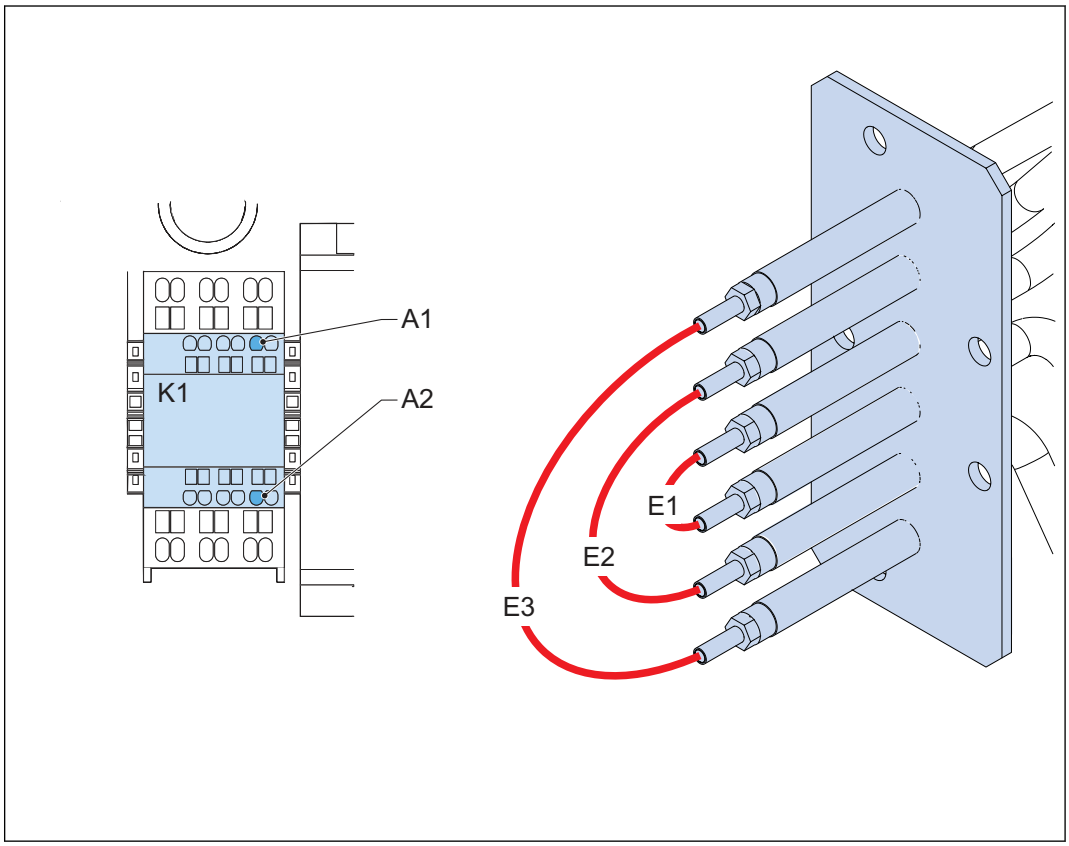

1. Measure the electrical resistance of the heating element (10.8kW / 400V).

Measurement	Value
E1	± 14.3 Ω
E2	± 14.3 Ω
E3	± 14.3 Ω

2. Measure the electrical resistance of the contactor coil (K1 + KM1).

Measurement	Value
A1-A2	± 205 Ω

7.8.2 Measure the blower

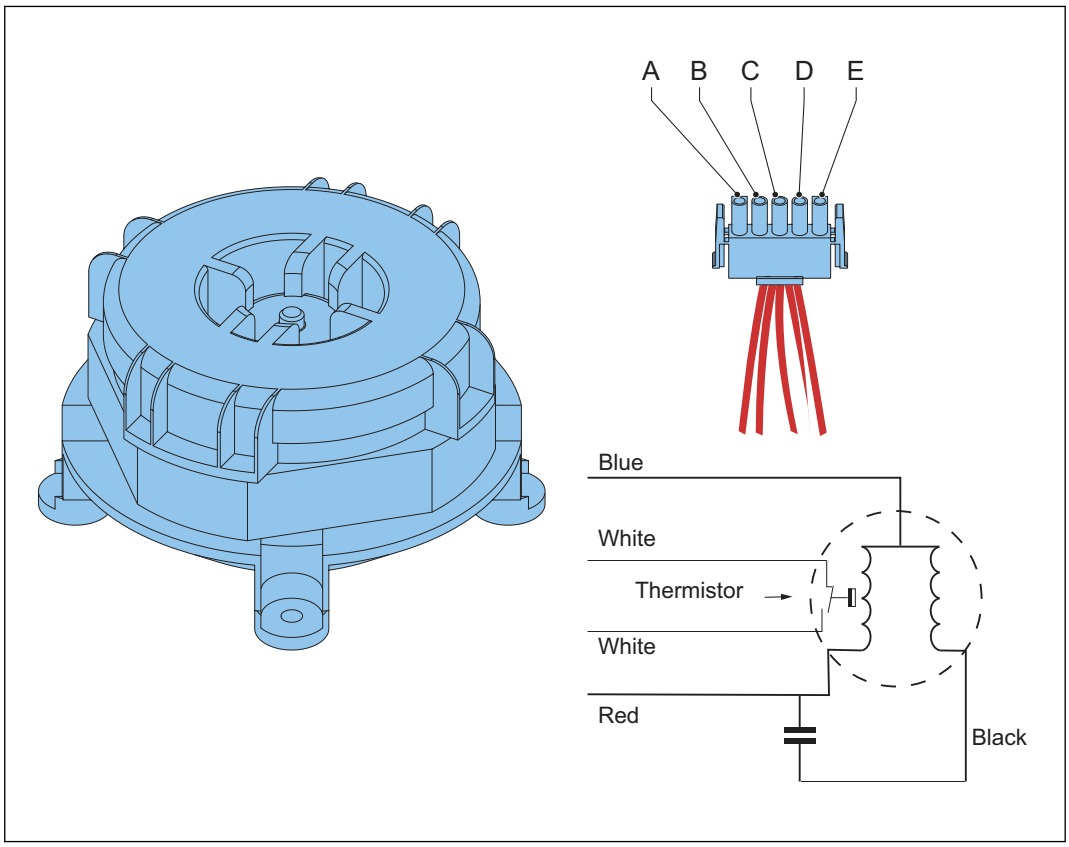

A	White	D	Red
B	White	E	Blue
C	Black		

1. Measure the electrical resistance of the blower.

Measurement	Value
A - B	0 Ω
C - D	64 Ω
C - E	37 Ω
D - E	27 Ω

2. Measure the electrical resistance of the blower with a test voltage of 500 VDC.

Measurement	Value
Mass - A	∞ Ω
Mass - B	∞ Ω
Mass - C	∞ Ω
Mass - D	∞ Ω
Mass - E	∞ Ω

7.8.3 Measure the capacitor

1. Measure the electrical capacitance of the capacitor.

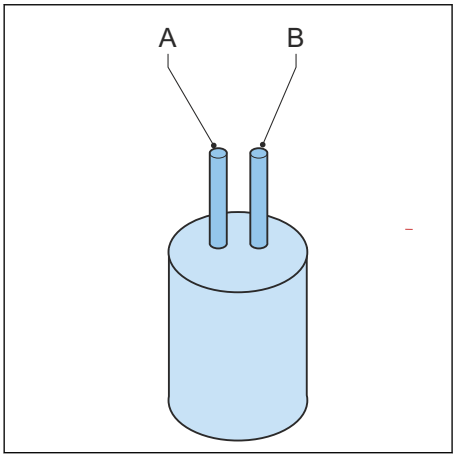

Capacitor	Measurement	Value	Description
C2+C3	A - B	6 µF	Blower M
C1	A - B	3 µF	Rotor M
C4	A - B	1.5 µF	Rotor M Start

7.8.4 Measure the rotor motor

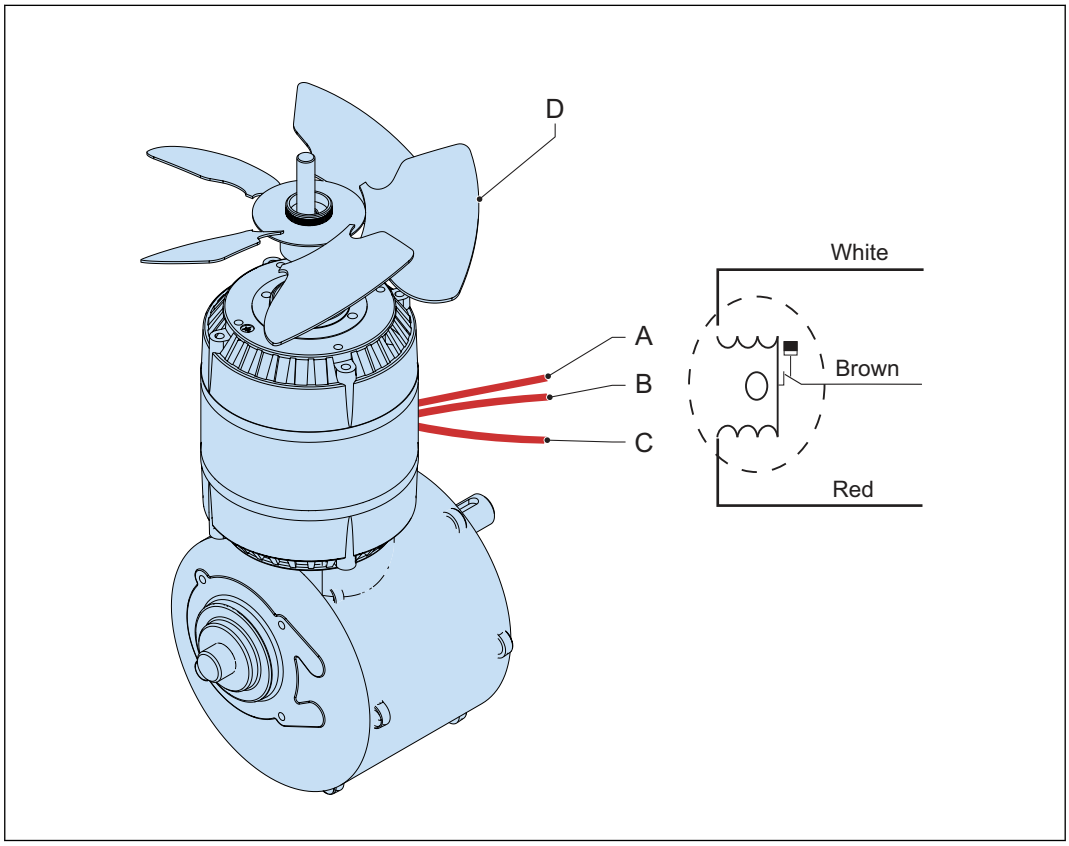

A White
B Brown
C Red

1. Measure the electrical resistance of the rotor motor.

Measurement	Value
A - B	120 Ω
B - C	120 Ω
A - C	240 Ω

2. Measure the electical resistance of the rotor motor with a test voltage of 500 VDC.

Measurement	Value
Mass - A	∞ Ω
Mass - B	∞ Ω
Mass - C	∞ Ω

7.8.5 Measure the temperature sensor

1. Measure the electrical resistance of the temperature sensor. Make sure that the temperature in the unit is the same as the measured temperature.

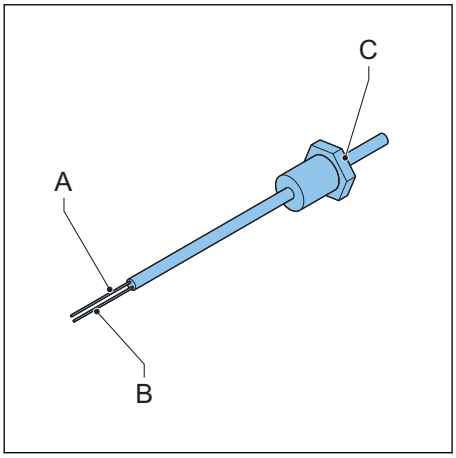

Measurement	Temperature	Value
A - B	−20 °C	921.60 Ω
	−10 °C	960.90 Ω
	0 °C	1000.00 Ω
	10 °C	1039.00 Ω
	20 °C	1077.90 Ω
	25 °C	1097.40 Ω
	30 °C	1116.70 Ω
	40 °C	1155.40 Ω
	50 °C	1194.00 Ω
	60 °C	1232.40 Ω
	70 °C	1270.00 Ω
	80 °C	1308.90 Ω
	90 °C	1347.00 Ω
	100 °C	1385.00 Ω
	110 °C	1422.00 Ω
	120 °C	1460.60 Ω
	130 °C	1498.20 Ω
	140 °C	1535.80 Ω
	150 °C	1573.10 Ω
	200 °C	1758.43 Ω
	250 °C	1940.81 Ω
	300 °C	2120.30 Ω

2. Measure the electical resistance .

Measurement	Value
C - A	∞ MΩ
C - B	∞ MΩ

7.8.6 Measure the motor valve

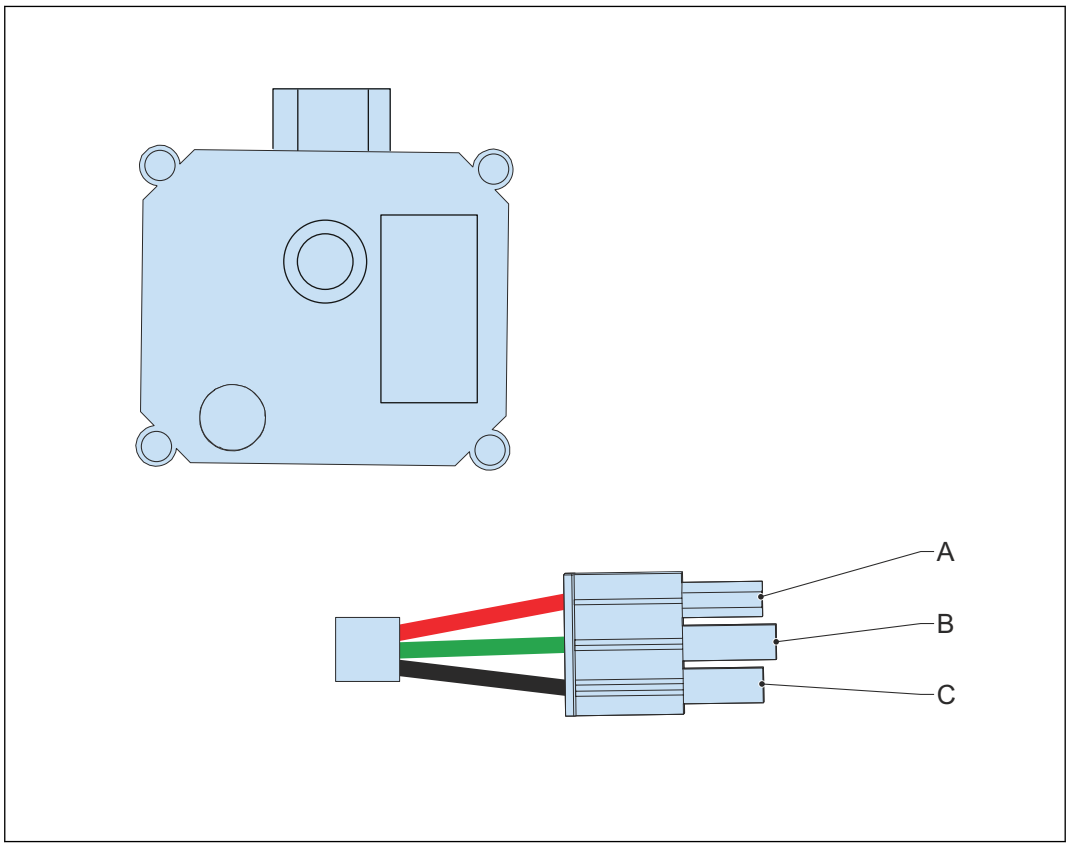

A Red
B Yellow-Green
C Blue-Black

1. Measure the electrical resistance of the motor valve.

Measurement	Value
A - B	>1 MΩ
B - C	>1 MΩ
A - C	>1 MΩ

2. Measure the voltage of the motor valve in the open position.

Measurement	Value
A - C	24 V DC
B - C	0 V

3. Measure the voltage of the motor valve in the closed position.

Measurement	Value
A - C	24 V DC
B - C	24 V DC

7.8.7 Measure the AC pump

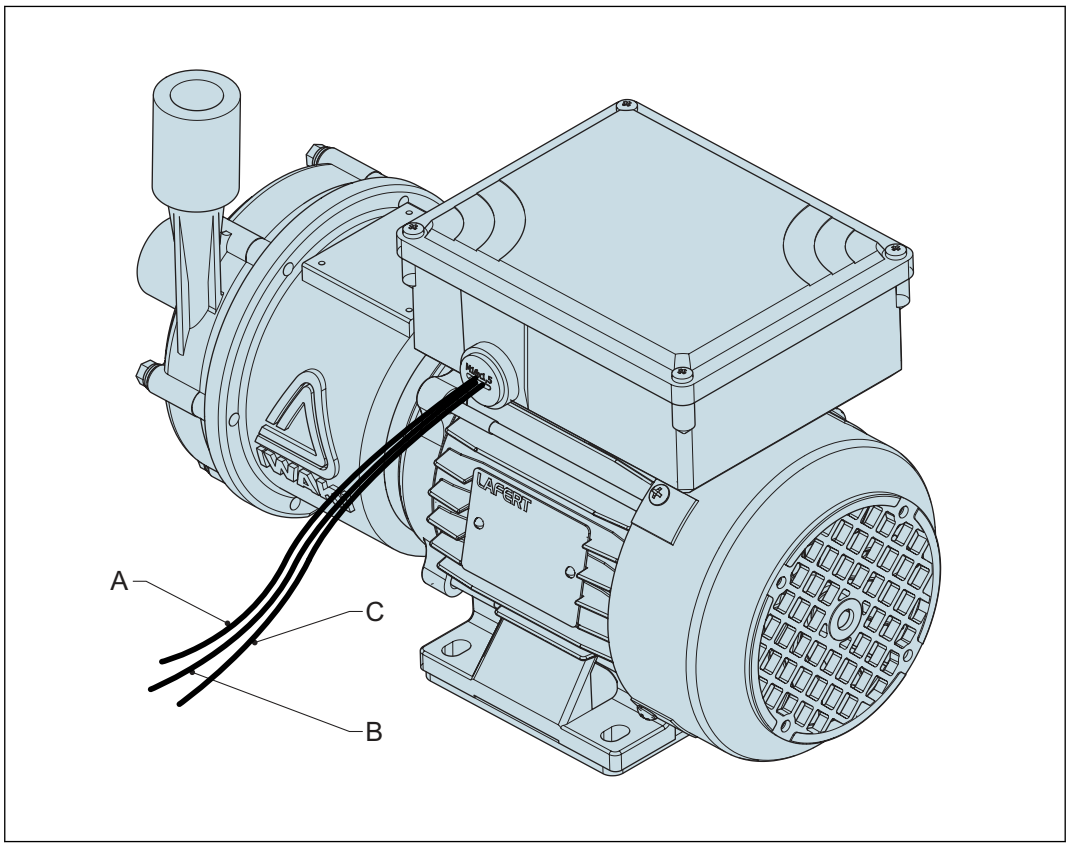

A Black
B Black
C Yellow-Green

1. Measure the electrical resistance of the motor valve.

Measurement	Value
A - B	± 16.5 Ω
B - C	∞ MΩ

2. Measure the voltage of the pump.

Combination	Value
A - B	230 V

3. Measure the amperage of the pump.

Measurement	Value
At full load	1–2 A

7.8.8 Measure the water level

1. Remove the filter (A) with plates (B).
2. Measure the water level at the correct point (C).

Note:
The ideal water level (X) is 7 cm. A tolerance of ± 0.5 cm is acceptable.

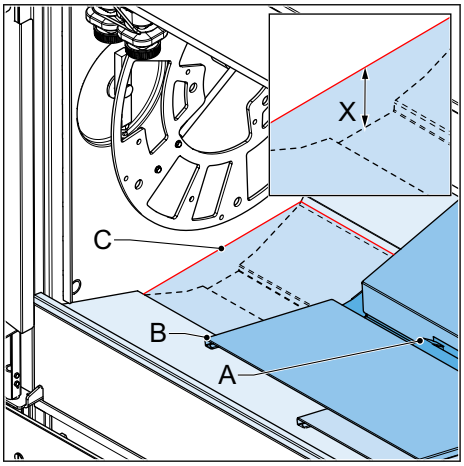

7.9 Part replacement

7.9.1 Remove the blower

1. Remove the fan plate. Refer to section *7.6.6*.
2. Loosen the nuts (10x) (A). The seal can stick.
3. Turn the blower (B) clockwise and move it down.

Note:
The fan with the motor can hang in position when the nuts are loose.

4. Disconnect the plug connection (C).
5. Remove the blower assembly.
6. Clean the seal (D). Remove the old gasket (E) and all gasket residues from the unit.

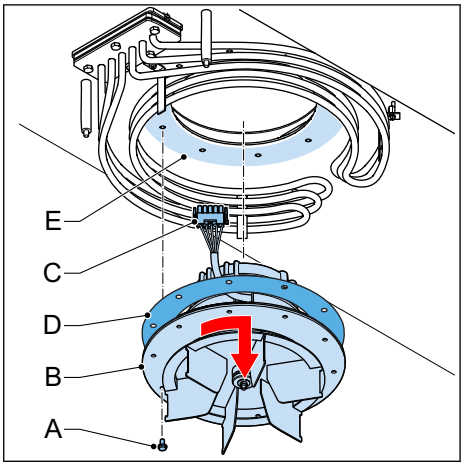

7.9.2 Install the blower

1. Install the seal (A).
2. Connect the plug connection (B).
3. Install the blower assembly (C). Push the blower in and counterclockwise to install the blower into place.
4. Tighten the 10 nuts (D).
5. Install the fan plate. Refer to section *7.6*.

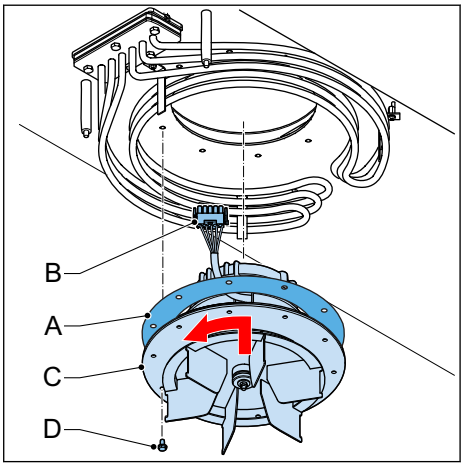

7.9.3 Remove the heating element

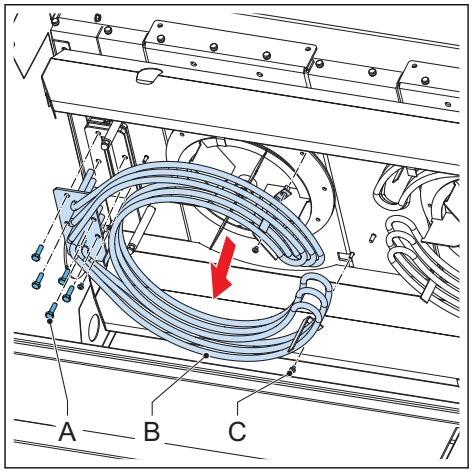

1. Remove the side panels. Refer to section *7.6*.
2. Remove the fan plate. Refer to section *7.6.5*.
3. Loosen the 3 nuts (C) that secure the heating element to the ceiling.
4. Loosen the 5 screws (A) in the mounting plate.
5. Hold the heating element (B) or pull the heating element down when the gasket sticks.
6. Make sure that you write down or take a picture of the wiring number or check the wiring diagram.
7. Disconnect the wiring with a spanner. Make sure that you hold the rear nut with a spanner when you disconnect the wiring and loosen the nuts.
8. Remove the heating element (B).
9. Clean the ceiling.

7.9.4 Install the heating element

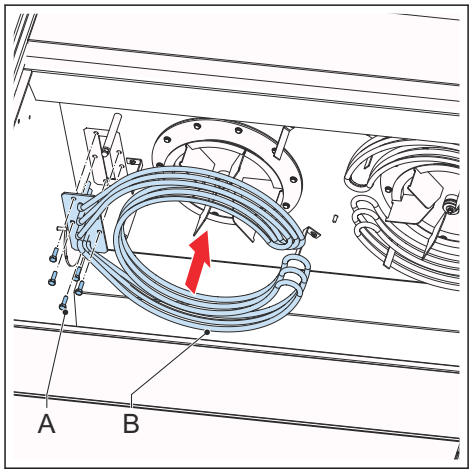

1. Install a new gasket.
2. Connect the wiring with a spanner. Make sure that you hold the rear nut with a spanner when you connect the wiring and tighten the nuts.
3. Install the heating element (B).
4. Tighten the 5 screws (A) in the mounting plate.
5. Tighten the 3 nuts (C) that secure the heating element (B) to the ceiling.
6. Install the fan plate. Refer to section *7.6.6*.
7. Install the side panel. Refer to section *7.6*.

7.9.5 Remove the rotor motor

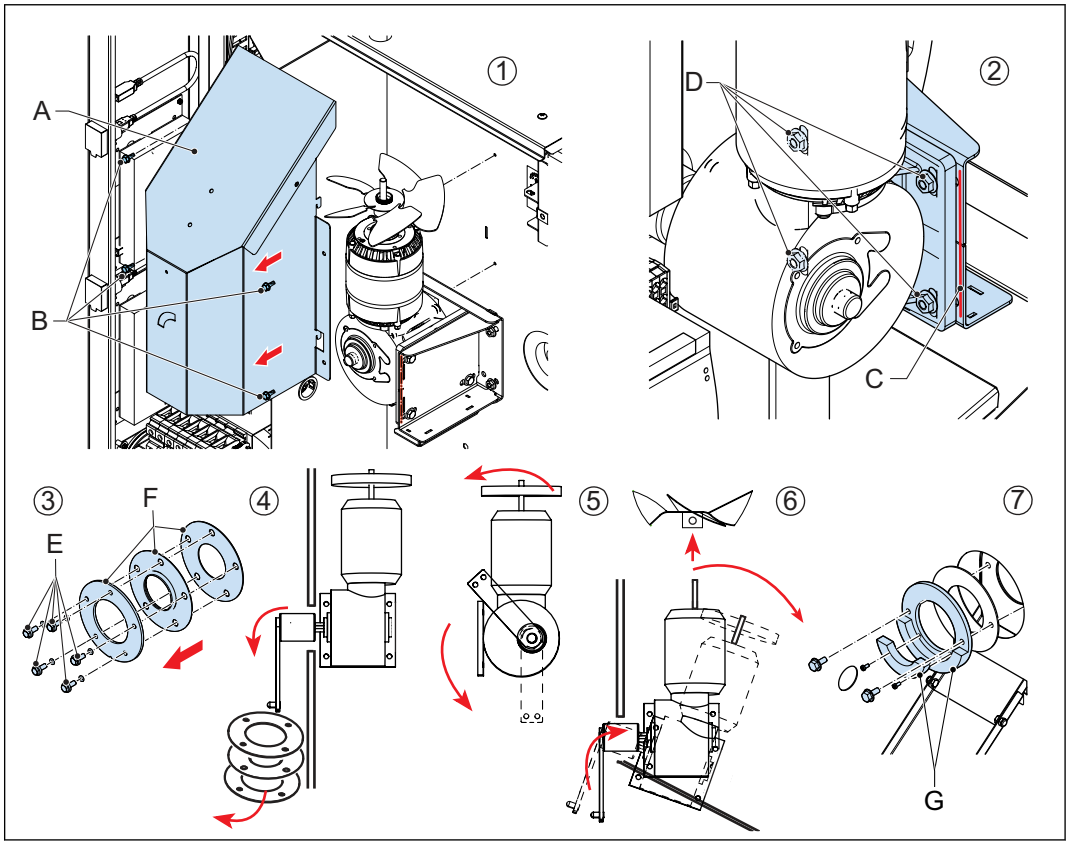

1. Remove the side panel. Refer to section *7.6*.
2. Use a marker to mark the position (C) of the rotor motor on the bracket. Refer to illustration 2.
3. Disconnect the wiring.
4. Remove the air guide (A).
5. Put the drive arm in the downward position. You can manually turn the fan blade to put the drive arm in the downward position. Refer to illustration 5.
6. Remove the fan blade. Refer to illustration 6.
7. Loosen the 5 bolts (E) from the shaft seal mounting plate. Refer to illustration 3.
8. Remove the mounting plate and shaft seals (F) from the drive arm. Refer to illustration 4.
9. Loosen the 4 screws with nuts (D) to remove the rotor motor from the bracket. Refer to illustration 2.
10. Remove the rotor motor. Refer to illustration 6.
11. Replace the rotor bearing assembly (G). Refer to illustration 7.

7.9.6 Install the rotor motor

Caution: After installation, make sure that the rotation direction of the rotor motor from the inside of the machine is counterclockwise.

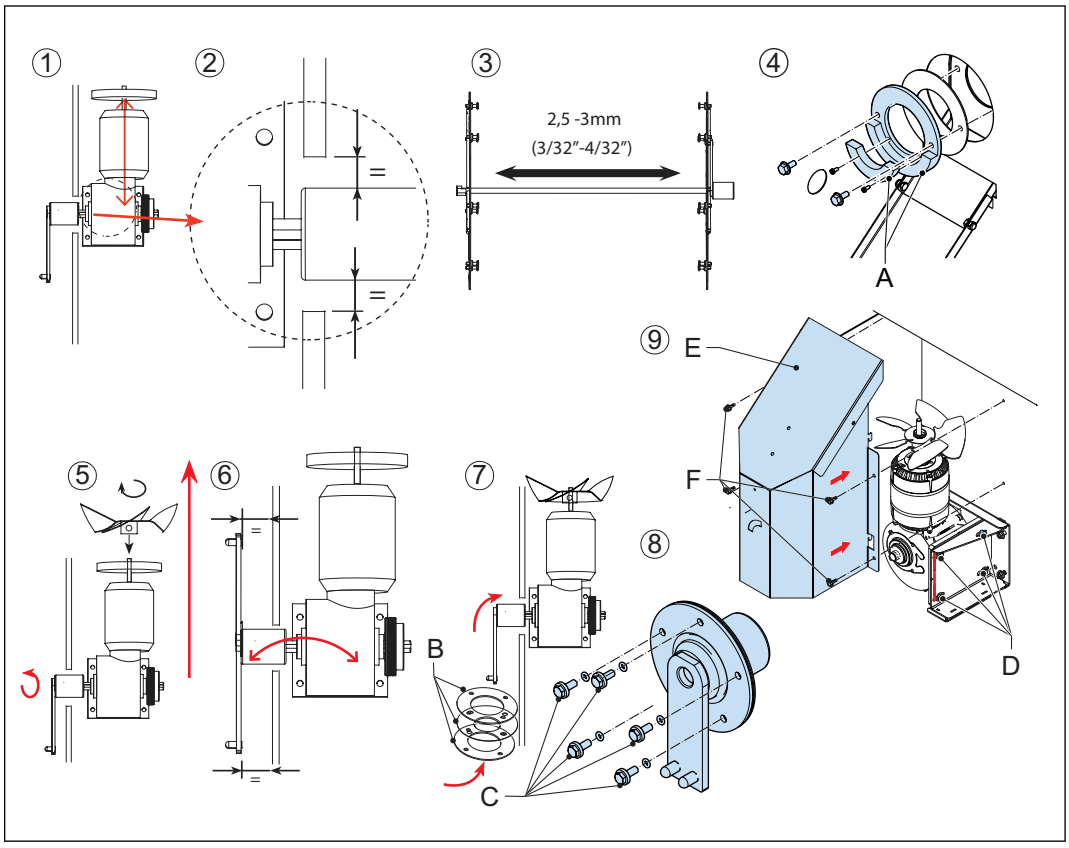

1. Install the bearing assembly (A). Refer to illustration 4.
2. Install the rotor motor. Refer to illustration 1.
3. Make sure that shaft is in the center of the hole. Refer to illustration 2.
4. Align the rotor motor with the marking on the bracket.
5. Tighten the 4 screws (D) to attach the rotor motor to the bracket. Refer to illustration 9.
6. Connect the wiring.
7. Move the mounting plate and shaft seals (B) over the drive arm. Use only new rotor seals.
8. Tighten the 5 bolts (C). Refer to illustration 8.
9. Install the rotor shaft. Make sure that the axial play is 2.5–3.0 mm or 3/32–4/32 inch. Refer to illustration 3.
10. Connect the power supply to test the rotation of the rotor. If the rotation direction is incorrect, change the connection of the cables. The air flow must go up. Refer to illustration 5.
11. Make sure that the distance of the drive arm in top position to the side is the same as the distance to the side in the bottom position. Refer to illustration 6.
12. Install the side panel.

8 Troubleshooting

8.1 General troubleshooting procedure

1. Before troubleshooting:
   a. Make sure that the time clock is correctly set.
   b. Make sure that the power supply operates correctly.
2. Try to find a solution for the problem. Use the troubleshooting table. Refer to section *8.2*.
3. If you cannot find a solution for the problem, refer to the supplier.

8.2 Troubleshooting table

Part	Problem	Possible cause	Possible solution
	The unit does not start.	The power supply is disconnected.	Connect the power supply.
		Short circuit or insulation problem.	Close the mains breaker.
		The fuse is defective.	Replace the fuse on the electrical panel.
		Wiring problem	Make sure that the wiring is not loose. Make sure that the connectors are connected. Make sure that the cable between the CPU board and the I/O board is connected.
		Malfunction of the control boards by mains power surge	Make sure that the wiring is not loose. Make sure that the connectors are connected.
		Malfunction of the touchscreen	Make sure that the touchscreen is clean and dry.
	The unit does not heat up.	The contactor is defective.	Replace the contactor.
		The temperature sensor is defective.	Replace the temperature sensor.

Part	Problem	Possible cause	Possible solution
		Wiring problem	Make sure that the wiring is not loose. Make sure that the connectors are connected. Make sure that the cable between the CPU board and the I/O board is connected.
		The unit is set to demo mode.	In the service settings, set *Demo mode* to *off*.
		The recipe is incorrect.	Adjust the recipe.
		The high limit thermostat is defective.	Replace the high limit thermostat.
	Bad cooking results, uneven cooking.	The fan blade is loose.	Tighten the fan blade.
		The blower is defective.	Replace the blower.
		The capacitor is defective.	Replace the capacitor.
		The ventilation openings in the fan plate are blocked.	Make sure that the ventilation openings in the fan plate are not blocked.
		The contactor hangs.	
		The temperature sensor is defective.	Replace the temperature sensor.
		The temperature sensor is not installed correctly.	Make sure that the temperature sensor is not installed too far into the cooking area.
		The cooling air that flows to the rotor motor is blocked.	Make sure that the air can move freely to the rotor motor.
		The rotor motor does not have the correct rotation direction.	Adjust the the rotation direction of the rotor motor.
	The product is not cooked. The cooking takes more time.	The heating element is defective.	Replace the heating element.
		Lost phase	Check the voltages to the machine.
		The contactor is defective.	Replace the contactor.
		The temperature sensor is defective.	Replace the temperature sensor.

Part	Problem	Possible cause	Possible solution
		The temperature sensor is not installed correctly.	Make sure that the temperature sensor is not installed too far into the cooking area.
		Wiring problem	Make sure that the wiring is not loose. Make sure that the connectors are connected. Make sure that the cable between the CPU board and the I/O board is connected.
		The high limit thermostat is open.	Cool down the machine. Check the (cooling) fans. Make sure that there are no air blockages.
		The ventilation openings in the fan plate are blocked.	Make sure that the ventilation openings in the fan plate are not blocked.
		The recipe is incorrect.	Adjust the recipe.
		The food product is incorrect.	Change the food product.
		The inner door is not installed.	Install or replace the inner door.
	You cannot hear beep sounds.	Wiring problem	Make sure that the wiring is not loose. Make sure that the connectors are connected.
		The buzzer or speaker is defective.	Replace the buzzer or speaker.
		The setting is set to off.	In the manager settings, set *Keyboard beep* to *on*.
	Mains fuse or breaker is set to off.	The mains plug is burned or wet.	Replace the mains plug. Make sure that the mains plug is dry.
		The heating element is defective.	Replace the heating element.

Part	Problem	Possible cause	Possible solution
		Wiring problem	Make sure that there is no shortage in the wiring. Make sure that the wiring is not wet.
	The rotor motor does not stop.	The rotor switch is pushed in.	
		Malfunction of the I/O board	Replace the I/O board.
	There light does not come on.	The LED lamp is defective.	Replace the LED lamp.
		The contactor is defective.	Replace the contactor.
		Wiring problem	Make sure that the wiring is not loose. Make sure that the connectors are connected.
		The setting is set to off.	In the manager settings, set *Toggle light* to *on*.
	The door does not close correctly.	The door is not installed correctly.	Make sure that you installed the door correctly. Make sure that the door is level.
	There is leakage of steam through the door.	The door is not installed correctly.	Make sure that you installed the door correctly. Make sure that the door is level.
	The light does not go off.	The contactor is defective.	Replace the contactor.
		The contacts stick.	
	The cooking area of the unit fills up with grease.	The drain filter is not clean.	Clean the drain filter.
		The grease drain is blocked.	Clean the grease drain.
		The grease drain valve is defective.	Replace the grease drain valve.
		Wiring problem	Make sure that the wiring is not loose. Make sure that the connectors are connected.
	The controls does not operate.	Leakage of steam through the rotor shaft.	Replace the shaft seal.

Part	Problem	Possible cause	Possible solution
		Leakage of steam through the door.	Make sure that you installed the door correctly. Make sure that the door is level.
		The controller is overheated.	Make sure that the air can move freely to the controller.
		The fuse is defective.	Replace the fuse on the electrical panel.
	There is water on the floor.	The water drain is blocked.	Clean the water drain.
		The water drain hose is not installed correctly.	Install the water drain hose correctly. Refer to the installer manual.
		The water drain valve is defective.	Replace the water drain valve.
		The water inlet valve is defective.	Replace the water inlet valve.
		The water inlet valve is blocked.	Clean the water inlet valve.
		The pump is defective.	Replace the pump.
	Bad cleaning results	The settings are incorrect.	Do a check of the parameters of the cleaning settings. Refer to section .
		The water supply is disconnected.	Connect the water supply. Open the tap.
		The descale filter is saturated.	Replace the descale filter.
		No descale filter is installed.	Install a descale filter. Refer to the water hardness.
		The cleaning cartridge is not installed correctly.	Install the cleaning cartridge correctly. Refer to the user manual.
		The type and amount of detergent is incorrect.	Use the correct type and amount of detergent.
		The water drain valve is defective.	Replace the water drain valve.
		The grease drain valve is defective.	Replace the grease drain valve.
		The suction filter is blocked.	Clean the suction filter.

Part	Problem	Possible cause	Possible solution
		The rinse valves are defective.	Replace the rinse valves.
		The pump is defective.	Replace the pump.
		The valve at suction side is defective.	The valve at suction side is defective.
		The water level is too low.	Do a check of the water level during cleaning. Refer to section *7.7.1*.
	Black or brown spots on the bottom or filter screens.	The detergent did not dissolve, because the unit was not cooled down.	

Part	Problem	Possible cause	Possible solution
Inner door	Broken glass	The inner door is closed with too much force.	Make sure that the user does not close the inner door with too much force.
		The bolts and nuts of the inner door are loose.	Tighten the bolts and nuts of the inner door.
		No PTFE ring is installed between the steel and glass.	Replace the door.
	The inner door does not open correctly.	The inner door is not installed correctly.	Make sure that the inner door is installed correctly. Make sure that the inner door is level. Adjust the inner door as necessary.
Outer door	Broken glass	The outer door is closed with too much force.	Make sure that the user does not close the outer door with too much force.
		The bolts and nuts of the inner door are loose.	Tighten the bolts and nuts of the outer door.
	The outer door does not open correctly.	The outer door is not installed correctly.	Make sure that the outer door is installed correctly. Make sure that the outer door is level. Adjust the outer door as necessary.

Part	Problem	Possible cause	Possible solution
Heating element	The unit does not get the set temperature.	Wiring problem	Make sure that the wiring is not loose. Make sure that the connectors are connected.
		The contactor is defective.	Replace the contactor.
		The heating element is defective.	Measure the electrical resistance of the heating element. Refer to section *7.8*. If necessary, replace the heating element.
	The duration of the cooking time is too long.	Wiring problem	Make sure that the wiring is not loose. Make sure that the connectors are connected.
		The heating element is defective.	Measure the electrical resistance of the heating element. Refer to section *7.8*. If necessary, replace the heating element.
Safety thermostat	The contactor is not set to on after the start of a recipe.	Wiring problem	Make sure that the wiring is not loose. Make sure that the connectors are connected.
		The safety thermostat is defective.	Make sure that the safety thermostat makes contact. If necessary, replace the safety thermostat.
	The contactor is set to off before the unit has set temperature.	The safety thermostat is defective.	Make sure that the safety thermostat is turned fully clockwise.
		The safety thermostat is not in the correct position.	Make sure that the safety thermostat is in the correct position.
Contactor	The contactor is not set to on after the start of a recipe.	Wiring problem	Make sure that the wiring is not loose. Make sure that the connectors are connected.

Part	Problem	Possible cause	Possible solution
		The coil is defective.	Measure the electrical resistance of the coil. If the resistance is not ±600 Ω, replace the coil.
	The contactor is set to on, but there is no power on the lamp or the heating element.	The contact is burned.	Do a check of the contacts of the contactor.
	The rotor motor does not operate. The blower does not operate.	The rotor motor does not operate.	Make sure that the wiring is not loose. Make sure that the connectors are connected.
		The capacitor is defective.	Measure the electrical capacitance of the capacitor. Refer to section *7.8.3*. If necessary, replace the capacitor.
Rotor motor	The rotor motor does not operate.	Wiring problem	Make sure that the wiring is not loose. Make sure that the connectors are connected.
		No power supply connected	Connect the unit to the power supply.
	The main fuse is burned.	The coil is defective.	Do a check of the insulation value of the coil on 500 V. Make sure that the minimum value is 0.5 MΩ. If necessary, replace the rotor motor.
	The rotor motor operates, but stops during operation.	The rotor motor is defective.	Measure the electrical resistance of the rotor motor. Refer to section *7.8.4*. If necessary, replace the rotor motor. Refer to section *7.9*.
		The gearbox has a blockage.	
		The capacitor is defective.	Measure the electrical capacitance of the capacitor. Refer to section *7.8.3*. If necessary, replace the capacitor.

Part	Problem	Possible cause	Possible solution
		The coil is overheated.	Make sure that fan on the rotor motor has the correct rotation direction. The air must flow upwards over the rotor motor.
			Do a check of the cooling circuit of the rotor motor.
			Make sure that the unit is not near another heat source.
			Measure the temperature of the rotor motor during operation.
Seal of the rotor motor shaft	Grease leaking	The seal of the rotor motor shaft has damage.	Replace the seal of the rotor motor shaft.
		The seal of the rotor motor shaft is not installed correctly.	Make sure that the rotor motor is correctly installed.
Blower	The blower does not operate.	Wiring problem	Make sure that the wiring is not loose. Make sure that the connectors are connected.
		No power supply connected	Connect the unit to the power supply.
	The main fuse is burned.	The coil is defective.	Do a check of the insulation value of the coil on 500 V. Make sure that the minimum value is 0.5 MΩ. If necessary, replace the blower.
	The blower operates after starting the blower manually.	The capacitor is defective.	Measure the electrical capacitance of the capacitor. Refer to section *7.8.3*. If necessary, replace the capacitor.
	The blower operates, but stops during operation.	The coil is overheated.	Do a check of the cooling circuit of the blower.
			Make sure that fan on the rotor motor has the correct rotation direction. The air must flow upwards over the rotor motor.

Part	Problem	Possible cause	Possible solution
			Make sure that the unit is not near another heat source.
			Measure the temperature of the blower during operation.
	The temperature showed on the touchscreen goes up very fast.	The blower does not operate. The heat stays in the top.	Check the I/O output board and/or replace the blower motor.
Temperature sensor	The temperature is higher than the set temperature.	The temperature sensor is defective.	Measure the electrical resistance of the temperature sensor. Refer to section *7.8*. Replace the temperature sensor.
		The temperature sensor is not installed correctly.	Make sure that the temperature sensor is not installed too far into the cooking area.
	The unit does not get the set temperature.	The temperature sensor is defective.	Measure the electrical resistance of the temperature sensor. Refer to section *7.8*. Replace the temperature sensor.
		The temperature sensor is not installed correctly.	Make sure that the temperature sensor is not installed too far into the cooking area.
	Error message: PT1000 underflow	The temperature sensor is defective. The wiring is shorted.	In the service settings, do an I/O test.
	Error message: Sensor shorted	The temperature sensor is defective. The wiring is shorted.	In the service settings, do an I/O test.
	Error message: PT1000 overflow	The temperature sensor is defective. The wiring is disconnected.	In the service settings, do an I/O test.
	Error message: Sensor open	The temperature sensor is defective. The wiring is disconnected.	In the service settings, do an I/O test.

Part	Problem	Possible cause	Possible solution
Touchscreen	The touchscreen does not operate.	Wiring problem	Make sure that the cable between the CPU board and the touchscreen is connected.
			In the manager settings, do a hard reset.
		The touchscreen is defective.	Replace the touchscreen.
	The touchscreen is difficult to operate.	Incorrect setting of the parameter	Make sure that the setting of the parameter is correct.
		There is moist on the touchscreen.	Clean the touchscreen. Remove moist from the touchscreen.
	The touchscreen does not come on.	Wiring problem	Make sure that the wiring is not loose. Make sure that the connectors are connected.
			Make sure that the CPU board has power. Make sure that the two LED indicators flash.
		The fuse is burned.	Do a check of the fuse on the I/O board. If necessary, replace the fuse.
			Do a check of the other fuses. If necessary, replace the fuse.
		Malfunction of the flat cable	Make sure that the flat cable is connected. Make sure that the flat cable has no damage. If necessary, replace the flat cable.
		The touchscreen is defective.	Replace the touchscreen.
		The CPU board is defective.	Replace the CPU board.
		The power board is defective.	Replace the power board.

Part	Problem	Possible cause	Possible solution
	The touchscreen shows strange data.	Incorrect setting of the parameter	Make sure that the setting of the parameter is correct.
		Incorrect version of the software.	Do an update of the software.
Pump	The pump does not operate.	Malfunction of the suction valve (Q1)	Make sure that the suction valve is closed while the water inlet valve is open and the water flows into the unit. If necessary, replace the suction valve.
		The suction filter is blocked.	Clean the suction filter.
		Wiring problem	In the service settings, do an I/O test of the pump.
			Make sure that the wiring is not loose. Make sure that the connectors are connected.
		The voltage decreases.	Do a check of the power supply.
	The pump has a leakage.	The swivel coupling is loose.	Tighten the swivel coupling.
		The swivel coupling is broken.	Replace the swivel coupling.
		The pump membrane is broken.	Replace the pump.
Water inlet valve (W1)	There is too much water in the unit.	The water inlet valve has a blockage.	Clean the water inlet valve.
		The water inlet valve is defective.	Replace the water inlet valve.
		Missing reducer (10 l/min)	Replace the water inlet valve with the correct water inlet valve.
	No water flows into the unit.	Wiring problem	Make sure that the wiring is not loose. Make sure that the connectors are connected.
		The water inlet valve is defective.	Replace the water inlet valve.
Valve at suction side (Q1)	No water stays in the unit.	The valve does not close when the unit fills with water.	In the service settings, do an I/O test of the valve.

Part	Problem	Possible cause	Possible solution
		The valve does not open when the unit fills with water.	Do a check of the wiring on the I/O board. Make sure that the wiring is not loose. Make sure that the connectors are connected.
Rinse valves (Q2 and Q3)	No water comes out of the sprayers.	The rinse valves stay closed.	In the service settings, do an I/O test of the valve.
			Do a check of the wiring on the I/O board. Make sure that the wiring is not loose. Make sure that the connectors are connected.
	Water comes out of the sprayers constantly.	The rinse valves stay open.	In the service settings, do an I/O test of the valve.
			Do a check of the wiring on the I/O board. Make sure that the wiring is not loose. Make sure that the connectors are connected.
	Water alternately comes out of the sprayers for 1 minute and at full pressure from one sprayer for the other minute.	One of the rinse valve stays open.	In the service settings, do an I/O test of the valve.
			Do a check of the wiring on the I/O board. Make sure that the wiring is not loose. Make sure that the connectors are connected.
Grease drain valve (Q4)	Oil stays on the bottom of the unit.	The grease drain valve does not open.	In the service settings, do an I/O test of the valve.
			Do a check of the wiring on the I/O board. Make sure that the wiring is not loose. Make sure that the connectors are connected.
		The grease drain valve does not close.	In the service settings, do an I/O test of the valve.

Part	Problem	Possible cause	Possible solution
			Do a check of the wiring on the I/O board. Make sure that the wiring is not loose. Make sure that the connectors are connected.
Water drain valve (Q5)	There is water in the grease container or on the floor.	The water drain valve does not open.	In the service settings, do an I/O test of the valve.
			Do a check of the wiring on the I/O board. Make sure that the wiring is not loose. Make sure that the connectors are connected.
	There is soap and grease in the unit after the cleaning program.	The water drain valve does not close and the water flows directly into the water drain hose.	In the service settings, do an I/O test of the valve.
			Do a check of the wiring on the I/O board. Make sure that the wiring is not loose. Make sure that the connectors are connected.

8.3 Error messages

Error code	Error message	Possible cause	Possible solution
Error 2	Sensor overflow (s)	The temperature reading is too high. The resistance is higher than 2200 Ω.	Replace the temperature sensor. Replace the I/O board. Make sure that the wiring is not loose.
Error 1	Sensor underflow (s)	The temperature reading is too low. The resistance is lower than 1000 Ω.	Replace the temperature sensor. Replace the I/O board. Make sure that the wiring is not shorted.
Error 5	Communication failure	The I/O board has a defect. The ribbon cable has damage.	Replace the I/O board. Replace the ribbon cable.

Error code	Error message	Possible cause	Possible solution
Error 15	Motor failure	The motor of the blower is overheated. The motor has a defect. The sensor wiring is incorrect.	Make sure that air is not blocked. Replace the capacitor. Replace the motor. Make sure that the sensor wiring is correct. Replace the I/O board.
Error 11	Door open picture	The door is open. The door switch has a defect. The sensor wiring is incorrect.	Close the door. Replace the door switch. Make sure the sensor wiring is correct.
Error 12	Lime filter full	The maximum amount of water is used. The setting of the water hardness is not correct. The lime filter is not connected.	Replace the lime filter. In the manager menu, set the parameter *Lime filter replaced* to *yes*. Make sure that the setting of the water hardness is correct. In the service menu, set the water hardness to '-'.
Message	Please clean first	The cleaning program was not completed because the power supply was disconnected. The user stopped the cleaning program.	Start the cleaning program.

9 Technical data

9.1 General specifications

Parameter	Specification
Water connection (inch)	19
Water pressure (psi)	29–72.5
Acidity (pH)	7–8
Chlorides (ppm)	<30
Hardness (dH)	<4
Drain connection (mm)	>40

9.2 Dimensions

Parameter	Specification
Width (mm)	1285
Depth (mm)	975
Height (mm)	1805

9.3 Mass

Parameter	Specification
Gross mass (kg)	495
Net mass (kg)	430

9.4 Electrical specifications

Parameter	Specification
Voltage (V)	400 (3~)
Maximum nominal current (A)	31
Power (W)	20600
Frequency (Hz)	50/60
Plug	5-pin CEE 32A 400VAC
Power cable length (m)	2,2

9.5 Ambient conditions

Parameter	Specification
Operation temperature (°C)	0–35
Storage temperature (°C)	0–35
Relative humidity (%)	20–80

9.6 Noise level

Parameter	Specification
Maximum noise level (dB(A))	<70

10 Spare parts

Priority	Description
None	General spares
1	Critical
2	Recommended

10.1 E-panel

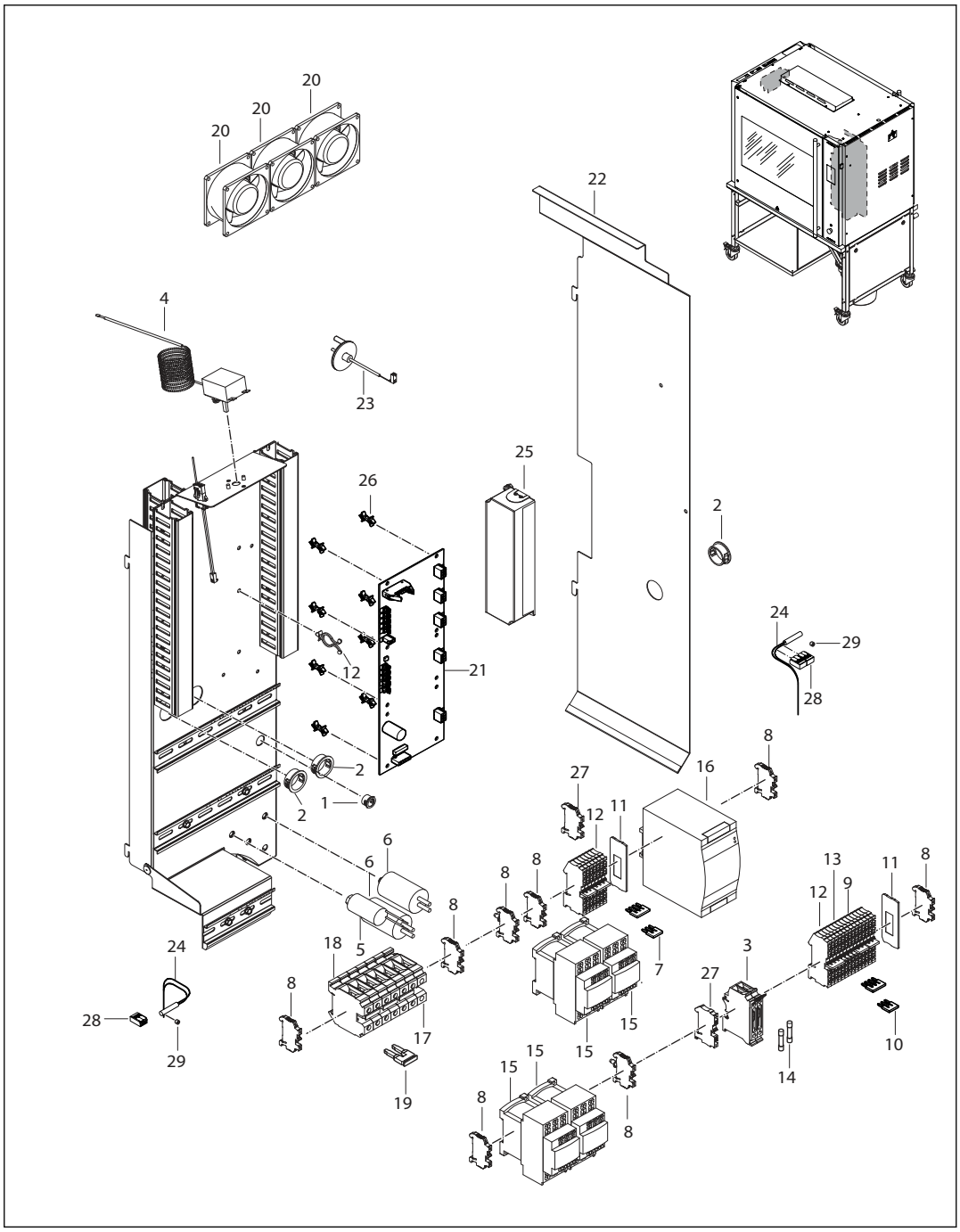

Position number	Part number	Description	Quantity in machine	Priority
0	900015285	E-panel (Complete)		
1	900016250	Grommet SB-562-7 Polyamide		
2	900016255	Grommet SB-1093-15 28		
3	9191218	Fuse Holder Phoenix UK 6.3-HESI		2
4	9040970	Thermostat 50-320°C, 55 13062.010		1
5	900016251	Capacitor 3 µF		
6	900016248	Capacitor 6 µF		
7	900016273	Plug-in Bridge FBS 3-6 PHX		
8	900016257	End Clamp Clipfix 35-5 PHX		
9	900016275	Terminal PT 4-4 PE (GN/YE) 4 qmm PHX		
10	900016272	Plug-in Bridge FBS 4-6 PHX		
11	900016258	End Cover D-PT 4 PHX		
12	900016276	Terminal PT 4-4 (GY) 4 qmm PHX		
13	900016277	Terminal PT 4-4 (BU) 4 qmm PHX		
14	900016254	Fuse 10A, Ceramical		1
15	900016243	Contactor LC1D183BL 24V DC		1
16	9311016S	Power Supply 24V 10A		1
17	900016280	Terminal Block-UT 35 PE PHX		
18	900016281	Terminal Block-UT 35 GY PHX		
19	900016278	Plug-in Bridge - FBS 2-16		
20	900016247	Fan EBM 8556N-696		1
21	9192400s	PCB Main (IO Board)		1
22	500011888	E-Panel Partition Plate + Studs		
23	9340266s	PT1000 LDR-E		1
24	3500020	Switch Proximity 4880 (Reed-contact)		1
25	9381038S	LED Driver 100W 12V 50/60hz (UL)		1
26	9110028	Spacer P-print, Nylon		
27	900013565	Terminal With Diode PT 4-DIO 1N 5408/R-L		1
28	9291122	WAGO Connector, 2 Conductor Wire Block		
29	9191049S	Screw M5x5 Set With Cup Point (10 pcs)		

10.2 Cables

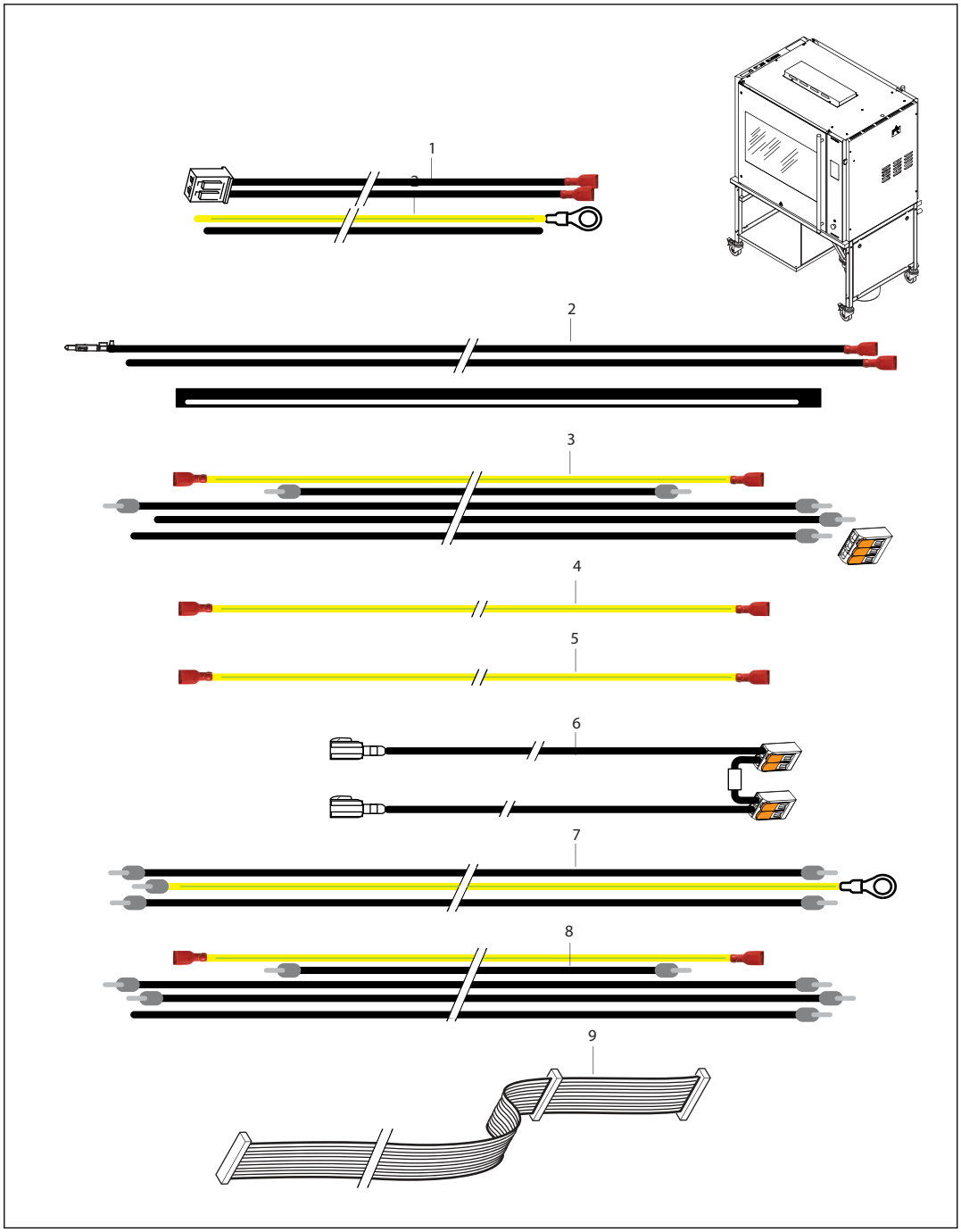

Position number	Part number	Description	Quantity in machine	Priority
0	900015286	Cable Kit Complete E-panel		
1	9311047	Cable Speaker S-Control		
2	900016285	Cable Drain Pump LDR Single		
3	900016826	Cable Rotor Button Operator Side		
4	900016827	Cable PE Panel		

Position number	Part number	Description	Quantity in machine	Priority
5	900016828	Cable PE UF		
6	900016829	Cable Water Valve Diode		
7	900015288	Cable Cooling Fans		
8	900016830	Cable Rotor Button Non-operator Side		
9	9172314	Ribbon Cable		

10.3 Panels

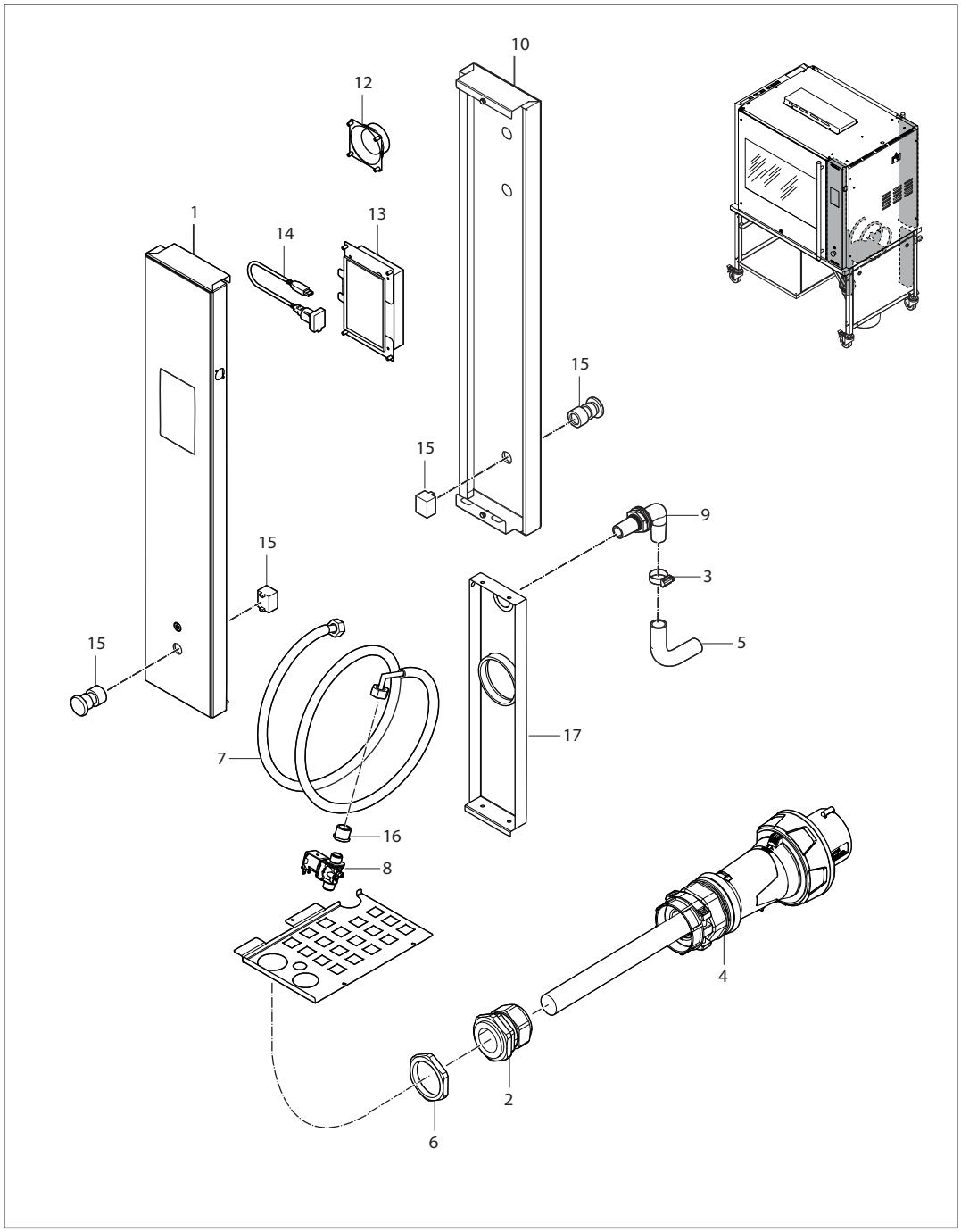

Position number	Part number	Description	Quantity in machine	Priority
1	900013560	Panel + Glass LDR S-Control Operator Side		2
2	9191395	Cable Gland M50 (208V)		
3	900016245	Hose Clamp 26-38 mm w=12,2 Galvanized		

Position number	Part number	Description	Quantity in machine	Priority
4	900016833	Power Cord + Plug 4P 208V / 80A		
5	9301059s	Hose Drain External		
6	9191394	Cable Gland Nut M50 (208V)		
7	9191203S	Hose NSF Ø12 mm 3/4"		
8	9312085	Valve-E 3/4" 12mm		1
9	900013571	Hose Connection Ø27mm		
10	900013561	Panel LDR-9+9 Blind Non-operator Side		
11	900013554	Panel Operator Side + 2 Rotor buttons		
12	9311046s	Speaker		2
13	9292280s	PCB CPU S-control + WIFI		1
14	9310161s	USB		2
15	900018615	Rotor button + switch element		1
16	9311028	Reduction Hexagon 3/4" - 1/2" (M-F)		
17	500012880	Rear Panel Connections UF LDR Single		

10.4 Doors

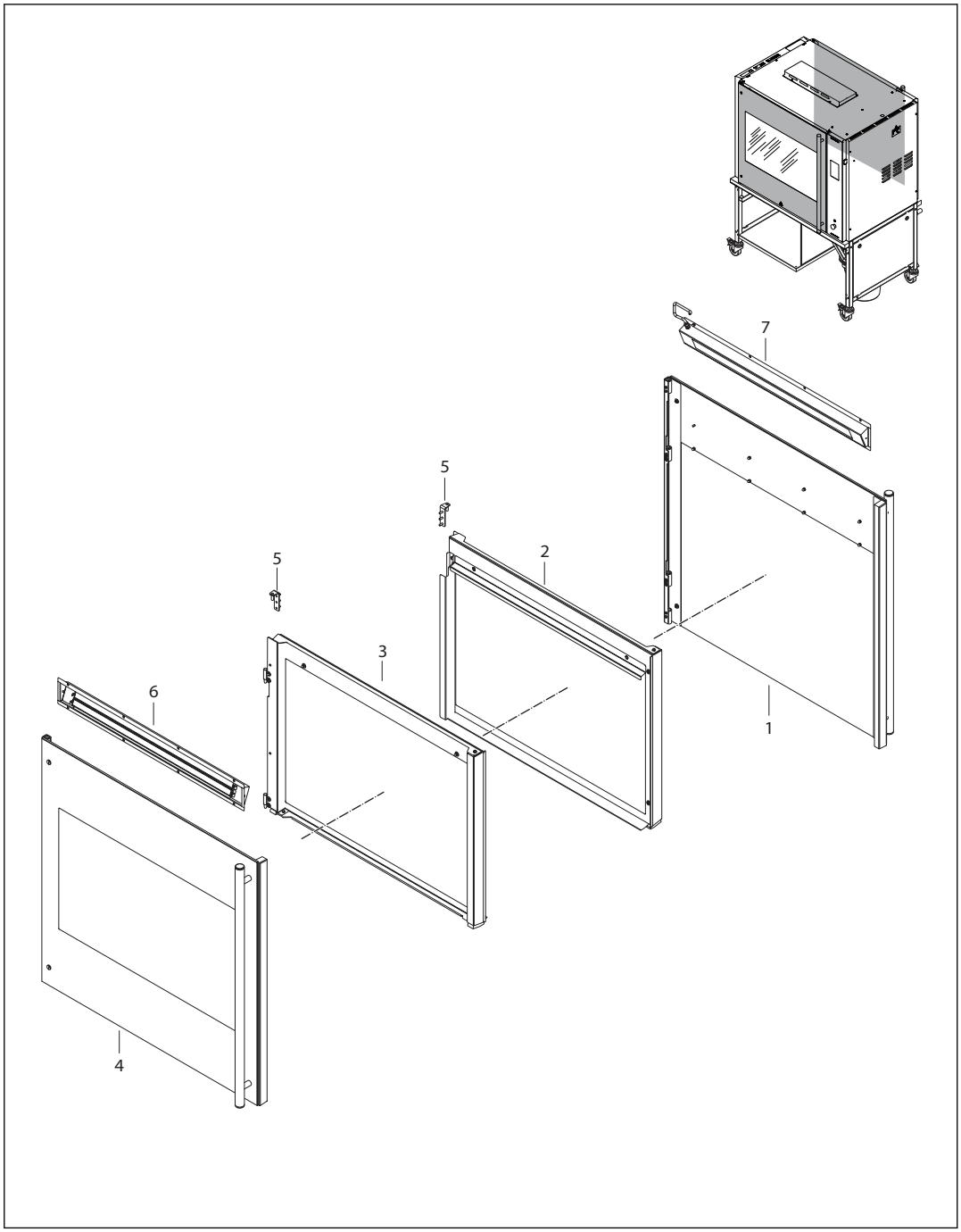

Position number	Part number	Description	Quantity in machine	Priority
1	900013547	Outer Door Non Operator Side LDR		
2	900013548	Inner Door Non Operator Side LDR		
3	900013540	Inner Door Operator Side LDR		
4	900013539	Outer Door Operator Side LDR		

Position number	Part number	Description	Quantity in machine	Priority
5	500011291	LDR Top Hinge		
6	900015289	LED Operator Side		2
7	900016513	LED Non Operator Side		2

10.5 Rotor

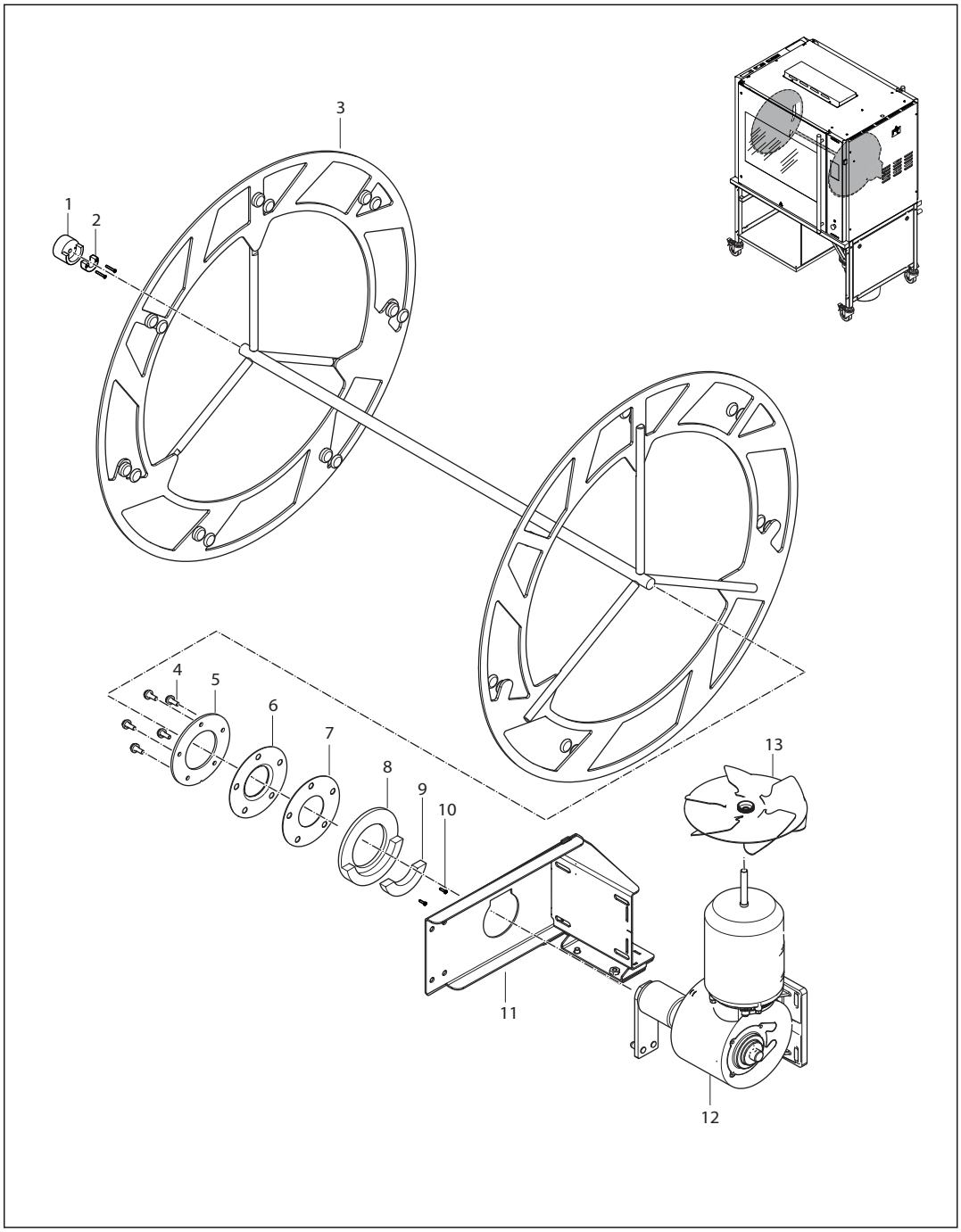

Position number	Part number	Description	Quantity in machine	Priority
1-2	9310180s	Rotor bearing		
3	900015298	Rotor LDR		
4 - 7	9312002s	Bolt M5 + PTFE Seal		1
		Pressure Ring, Lipseal Rotor		1
		Silicone Disc Ø100		1
		Seal Drive Motor 5 Holes		1
8	900019513	Bearing support		1
9-10	900016823	Rotor motor bearing		1
11	9310424	Support Motor Parvalux		
12	9340105s	Motor SD 8 WS Marked EN		2
13	9172078	Blade Fan 150 mm For Parvalux		

10.6 Blower and heating

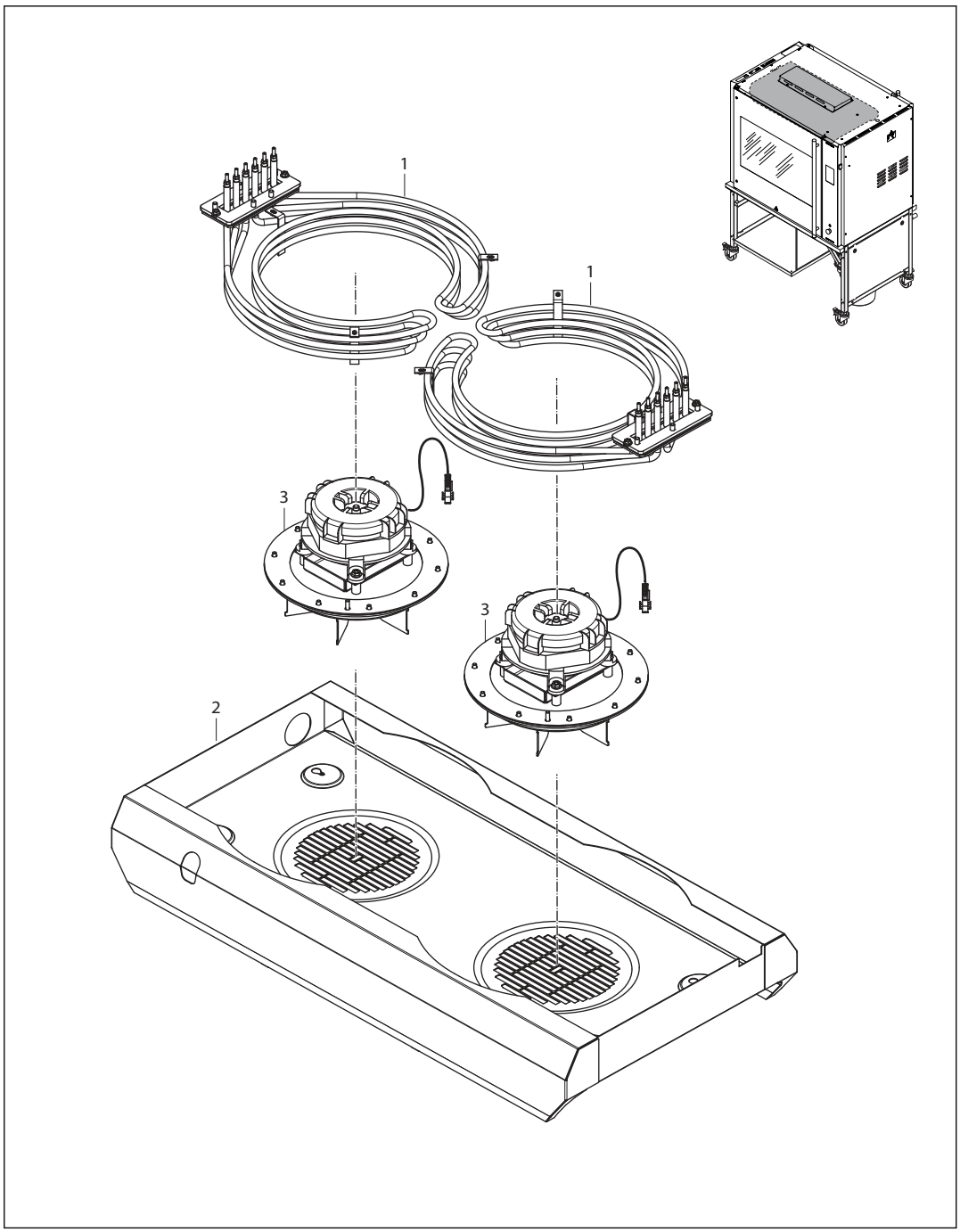

Position number	Part number	Description	Quantity in machine	Priority
1	9312080s	Heating Element 400V 9.3 kW		1
2	900013538	Fan Plate LDR		
3	9310149S	Motor Fan		1

10.7 Cartridge holder

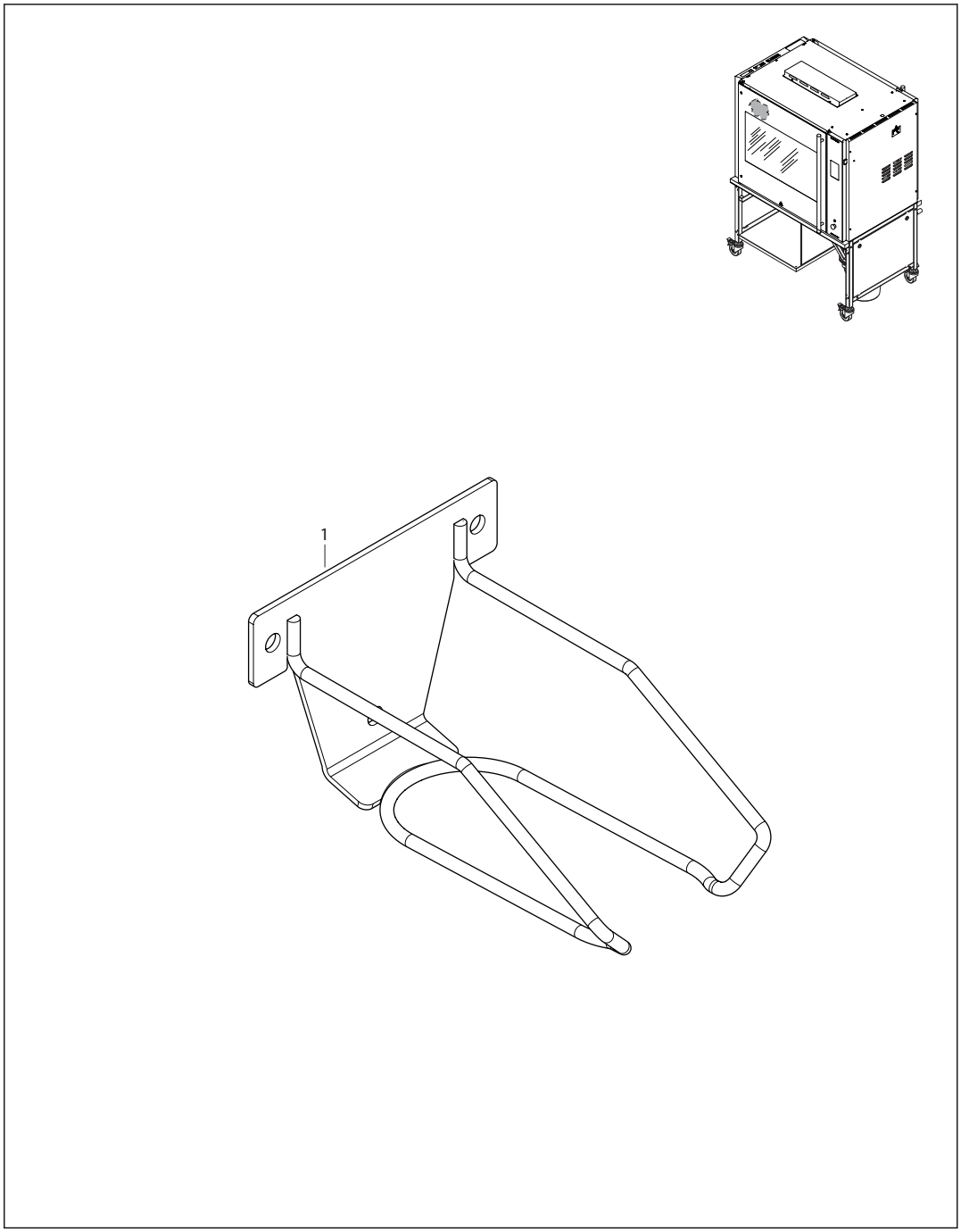

Position number	Part number	Description	Quantity in machine	Priority
1	900016872	Soap Holder Double		

10.8 Cleaning system

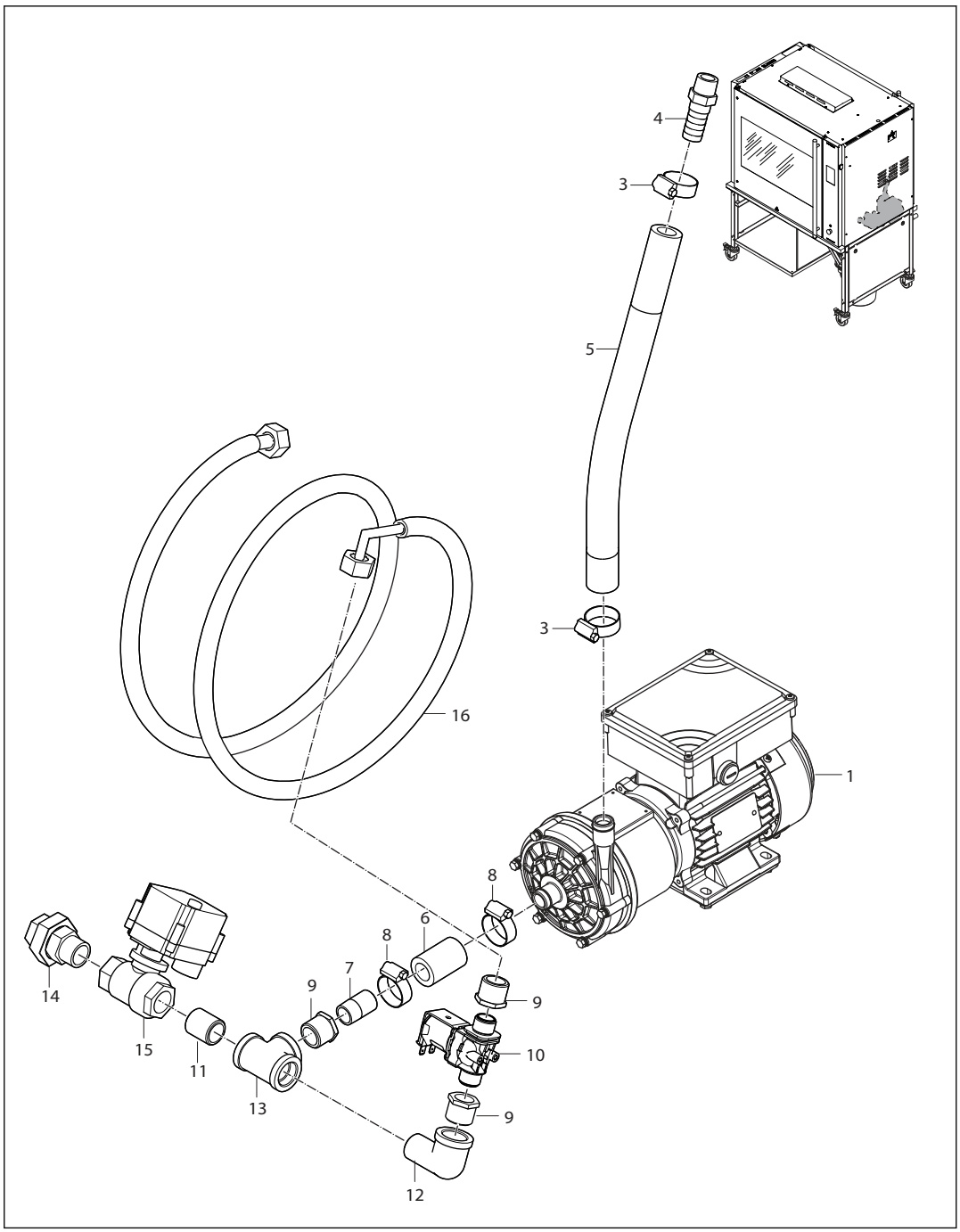

Position number	Part number	Description	Quantity in machine	Priority
1	900013562	Auto Clean Pump		1
2	9311038	Hose Clamp Spring Ø23		
3	9311011	Hose Pillar 1/2" (M) SS		
4	500011869	Hose Pillar 1/2"x19mm AISI 316		
5	900015292	Hose Pump 1 (Out)		

Position number	Part number	Description	Quantity in machine	Priority
6	900015290	Hose Pump 1 (In)		
7	9311019	Nipple Welding 1/2" BSP		
8	900016245	Hose Clamp 26-38 mm w=12,2 Galvanized		
9	9311028	Reduction Hexagon 3/4" - 1/2" (M-F)		
10	9301108s	Hose Watersupply (Top)		
11	9301056	Nipple Treaded 3/4" (M-M) 30mm TP316 150LBS		
12	9301031	Elbow Threaded 3/4" (F-M) TP316 150LBS		
13	9301028	Tee Threaded 3/4" (F-F-F) BSO TP316 150LBS		
14	9301027	Union Conicle-Flatsealing 3/4" (M-F) SS		
15	9311013s	Valve -2/2 3/4" With Brass Insert + Molex		1
16	9191203S	Hose NSF Ø12 mm 3/4"		

10.9 Cleaning system - Hoses

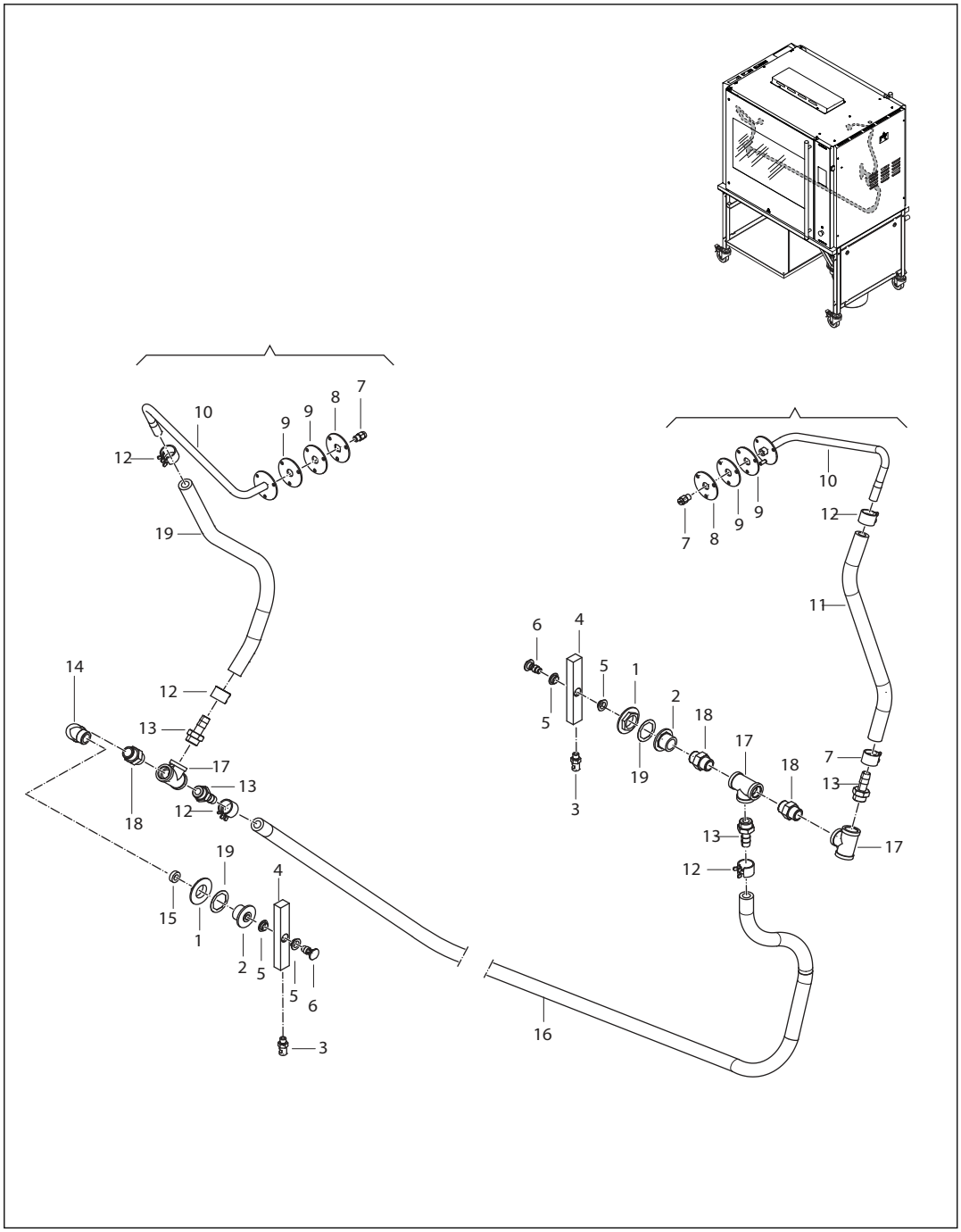

Position number	Part number	Description	Quantity in machine	Priority
1	9311021	Hexagon Nut 3/4 BSP		
2	500011445	Sprinkler Inlet 2.0		
3	9301007	Spoon Nozzle B1/8 FL20		
4	500011447	Sprinkler Arm 2.0		
5	500011503	Flange Bearing XFM-1214-055		2

Position number	Part number	Description	Quantity in machine	Priority
6	500011446	Sprinkler Axle 2.0		2
7 - 10	900013564	Spray Nozzle B1/8F9520		
	900013564	Mounting Plate Top Sprinkler		
	900013564	Seal Top Sprinkler		
	900013564	Sprinkler (Top)		
11	9301059s	Hose Sprinkler Top Right		
12	9311038	Hose Clamp Spring Ø23		
13	9311011	Hose Pillar 1/2" (M) SS		
14	3721050	Elbow Threaded 1/2" (F-M) BSP TP316 150LBS		
15	9312146	Seal Silicone Ø19xØ10		
16	9301059s	Hose Sprinkler Left		
17	3721046	Tee threaded 1/2" (F-F-F) BSP TP316 150LBS		
18	3721047	Hexagon Nipple Threaded 1/2" (M-M) BSP TP316 150LBS		
19	9301059s	Hose Sprinkler Top Left		

10.10 Cleaning system - Filtration

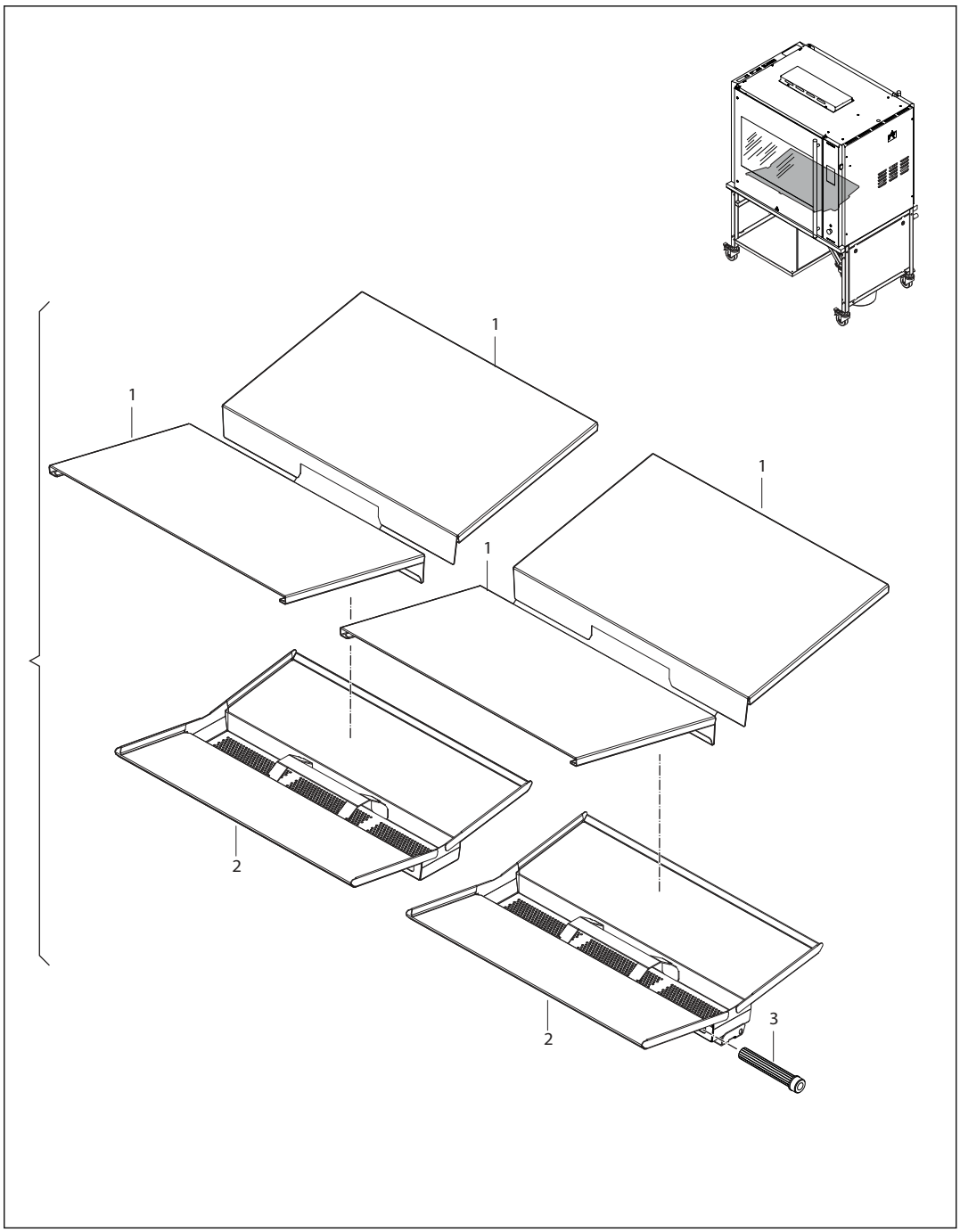

Position number	Part number	Description	Quantity in machine	Priority
1 - 2	9340134s	Cover Bottom LDR		
		Filter Basket LDR		
3	900016831	Filter Auto Clean		

10.11 Cleaning system - Drainage

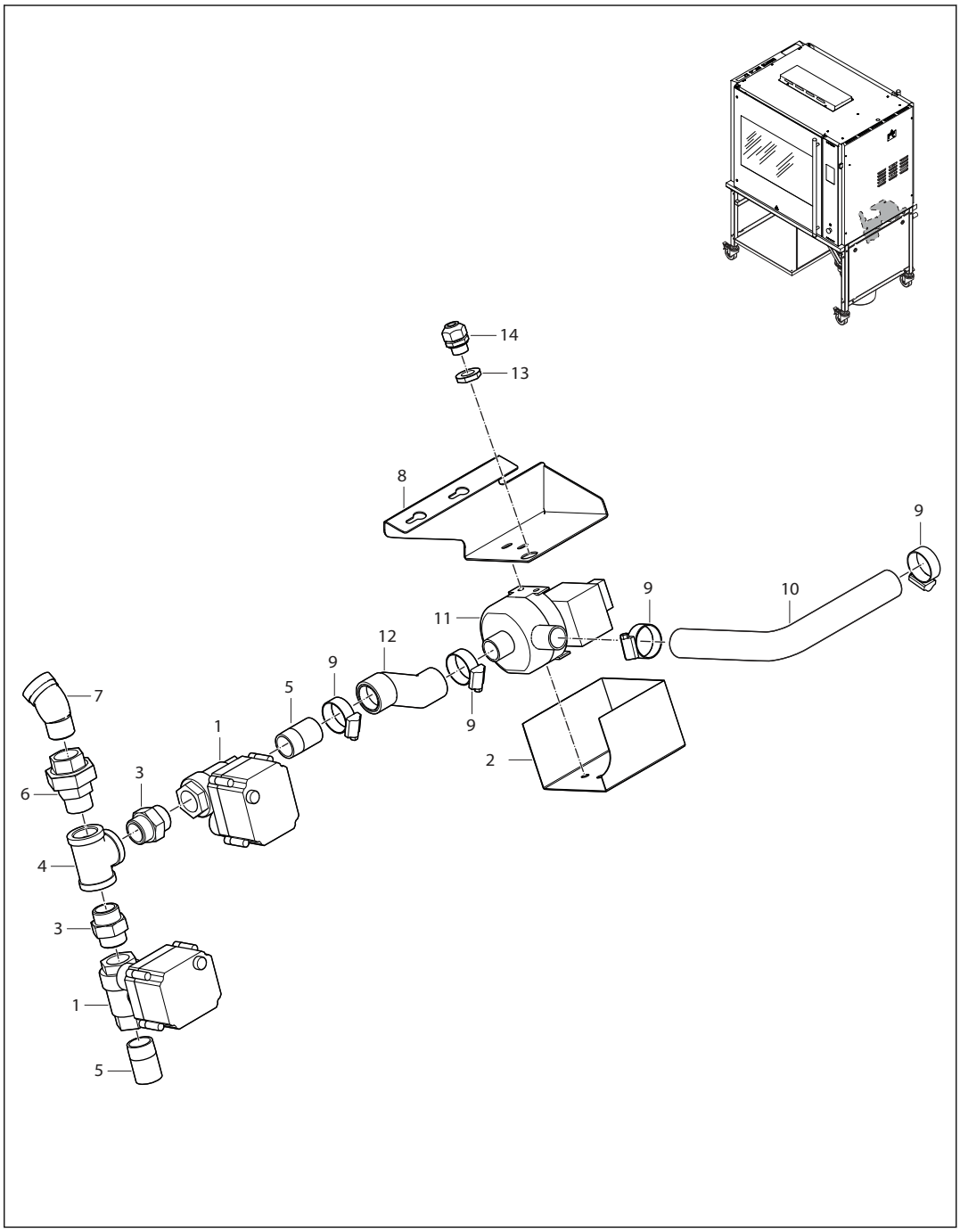

Position number	Part number	Description	Quantity in machine	Priority
1	9311013s	Valve -2/2 3/4" With Brass Insert + Molex		1
2	500012867	Cover Drain pump		
3	3721029	Hexagon Nipple Threaded 3/4" (M-M) BSP TP316 150LBS		
4	9301028	Tee Threaded 3/4" (F-F-F) BSO TP316 150LBS		
5	9301006	Nipple Welding 3/4" (F) BSP, TP316 150LBS		

Position number	Part number	Description	Quantity in machine	Priority
6	9301027	Union Conicle-Flatsealing 3/4" (M-F) SS		
7	9301054	Elbow 45°, RVS 3/4" (F)-(M) BSP 316L 150LBS		
8	500012866	Bracket drain pump		
9	900016245	Hose Clamp 26-38 mm w=12,2 Galvanized		
10	9301059s	Hose Drain Pump Out (Top)		
11	9312083s	Drain Pump		1
12	9311053	Performed hose		
13	2641023	Nut M16 for cable gland		
14	2641022	Cable gland M16		

10.12 Sheet metal - Outside

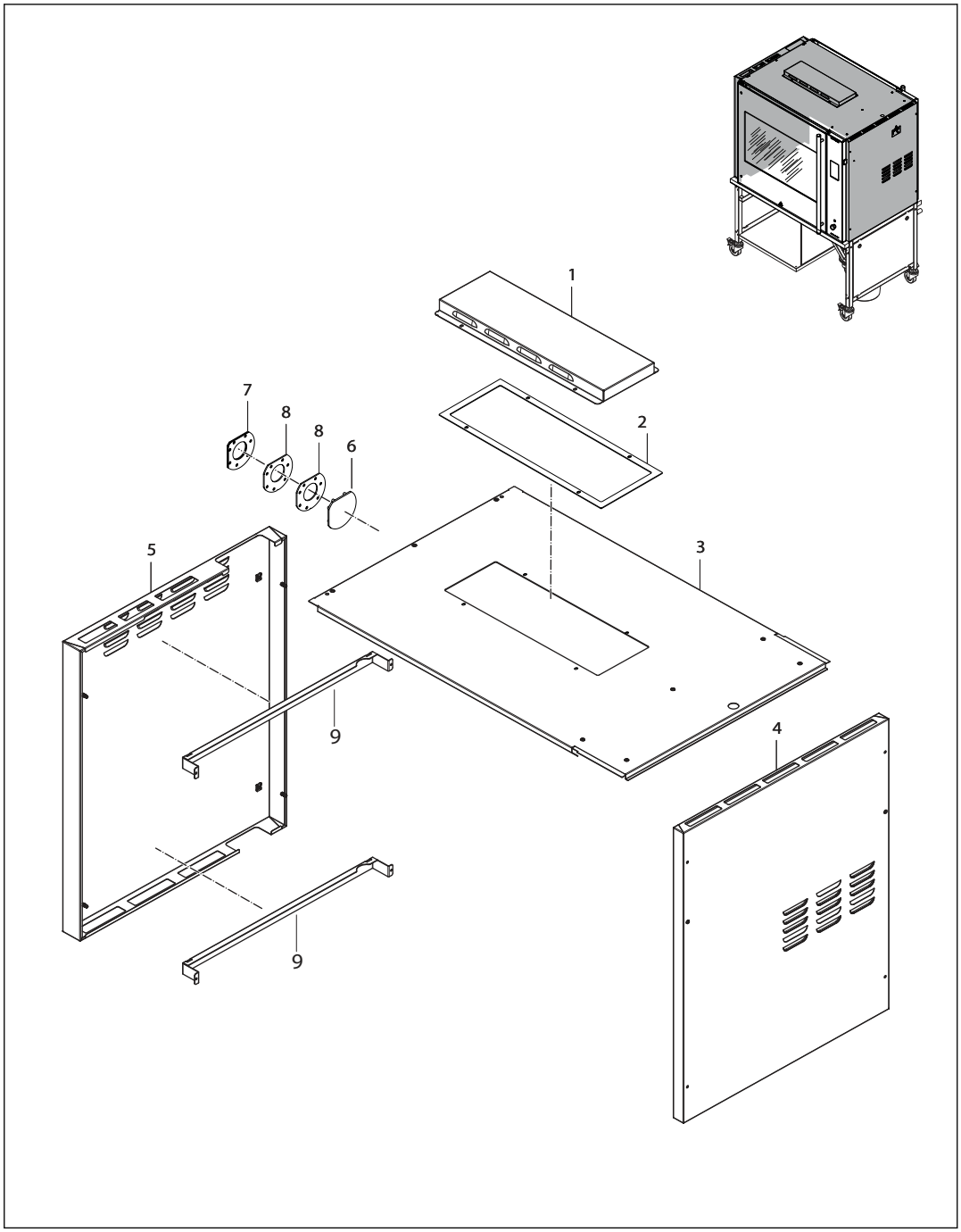

Position number	Part number	Description	Quantity in machine	Priority
1	9344182	Top panel (Louvres) LDR-E		
2	500011119	Seal Cover Fans LDR AC		
3	500011123	Top Plate LDR AC (Top Unit)		
4	500011129	Side Panel LDR AC Top Right		
5	500011125	Side Panel LDR AC Top Left		

Position number	Part number	Description	Quantity in machine	Priority
6	500012105	Fixing Plate Cover Exhaust		
7	500012612	Mounting Plate Exhaust		
8	500010608	Seal Exhaust		
9	500012489	Bracket Left Side Covers LDR AC 2.0		

10.13 Insulation

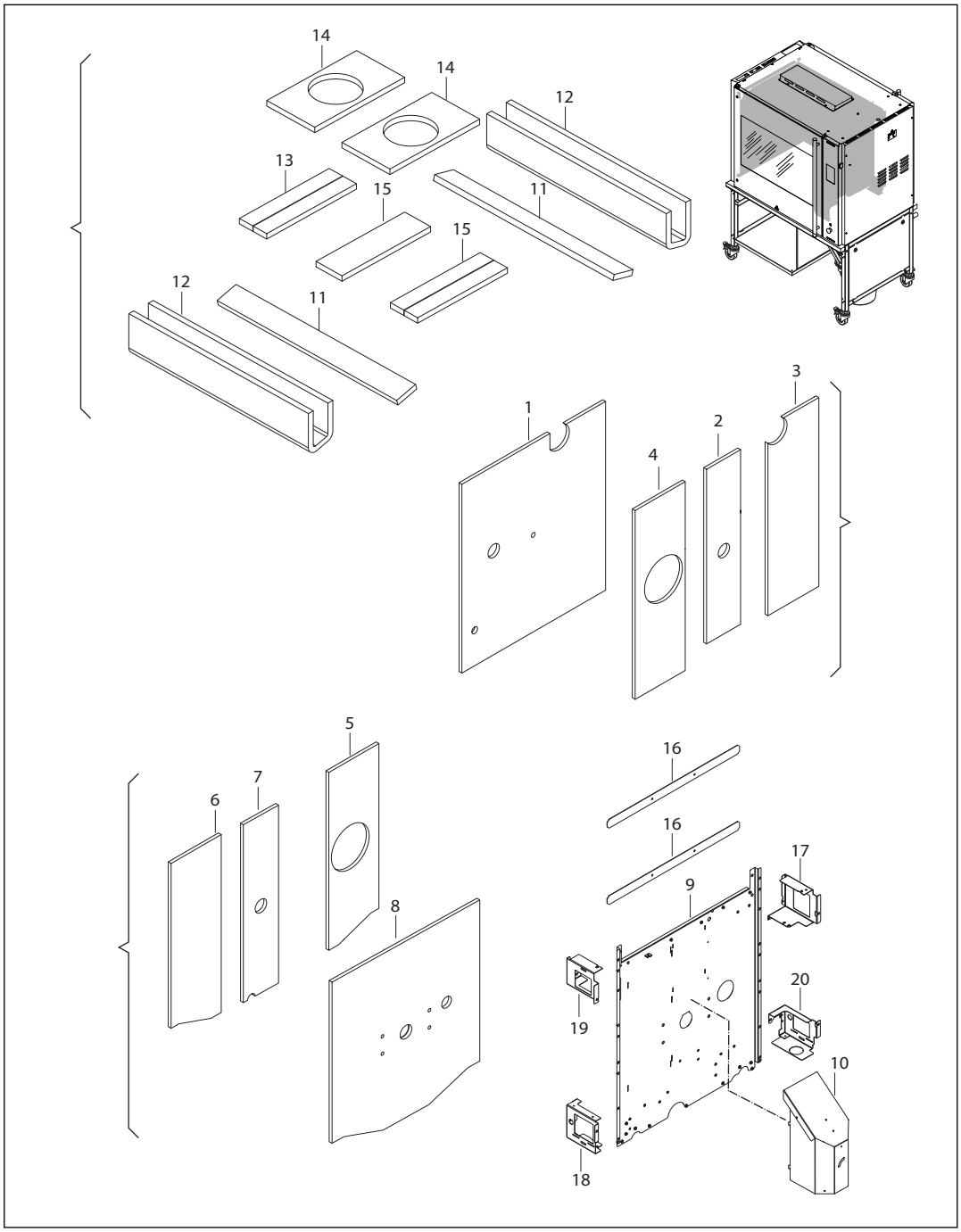

Position number	Part number	Description	Quantity in machine	Priority
1 - 4	900015276	Insulation XL Left		
		Insulation Middle Left		
		Insulation Left 1		
		Insulation Left 2		
5 - 8	900015277	Insulation Rght 1 (LDR-E)		
		Insulation Right 2 (LDR-E)		
		Insulation Middle Right (LDR-E)		
		Insulation XL Right (LDR-E)		
9	500010560	Machine Room		
10	500010548	Cover Motor 2.0		
11 - 15	900015278	Insulation Top Middle Small 2		
		Insulation Top Middle Small		
		Insulation Top Heating Element		
		Insulation Top Sisme		
		Insulation Top Middle		
16	9314188	Strip Insulation		
17	500010561	Support Rear Up		
18	500010563	Support Front Low		
19	500010564	Support Front Up		
20	500010562	Support Rear Low		

10.14 Under frame

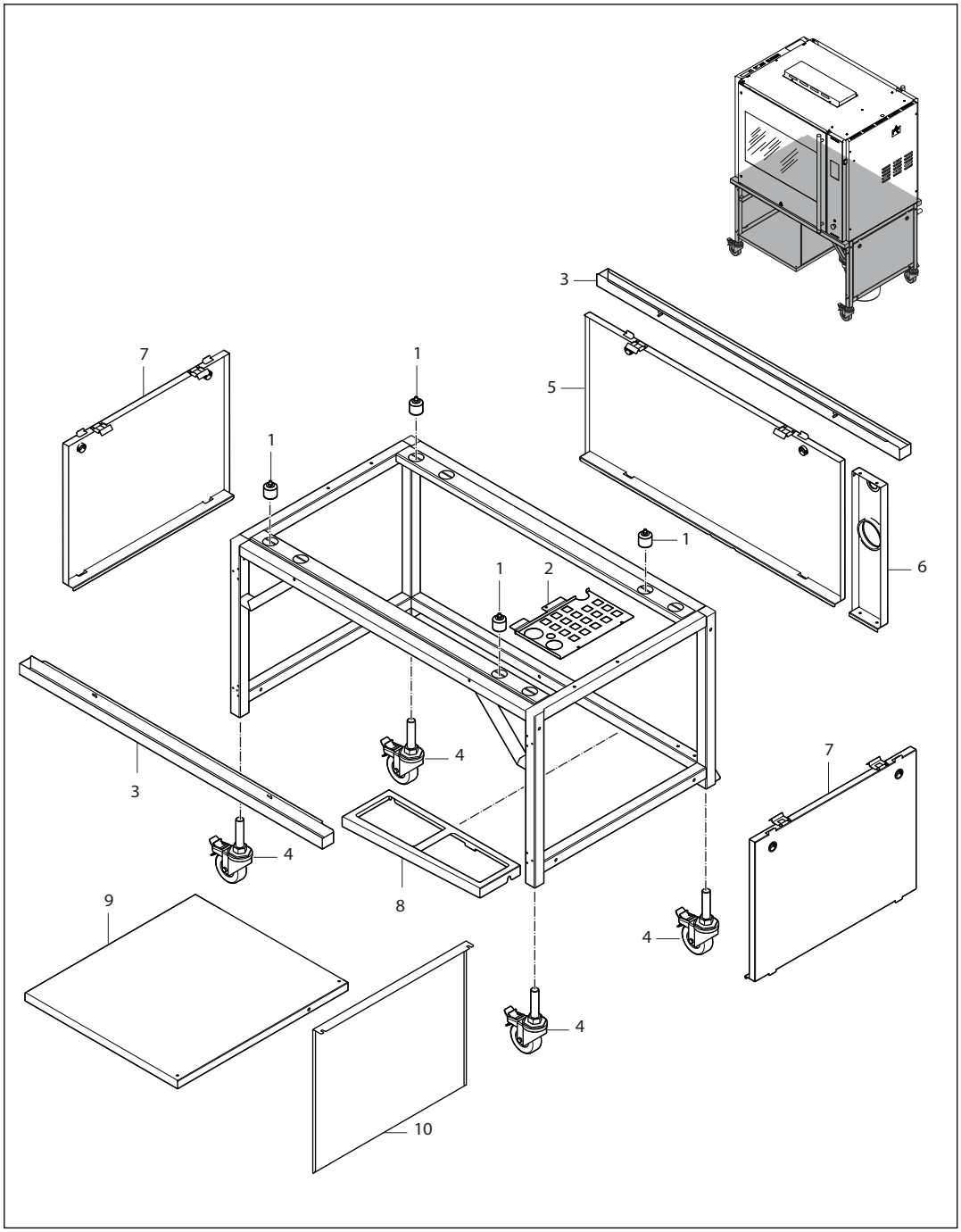

Position number	Part number	Description	Quantity in machine	Priority
1	9312214	Rubber Support Ø40x30 M8		
2	500012878	Cover plate UF LDR		
3	500011819	LDR UF Drip Tray		
4	9190177	Castor 100 mm With Brake		
5	500012879	Rear panel Open UF LDR Single		

Position number	Part number	Description	Quantity in machine	Priority
6	500012880	Rear panel Connections UF LDR Single		
7	9314603	Side panel open UF		
8	9344170	Bracket positioning bucket UF LDR		
9	500012878	Bottom Cover LDR Single		
10	500012873	Panel box UF LDR		

10.15 Accessories

10.15.1 Rotisserie accessories

Part number	Description	Quantity in machine	Priority
9342007	Meat basket		
9340201	Meat basket, set of 7		
9342011	V-spit		
9340200	V-spit, set of 8		
9342073	Meat fork LDR		

11 Appendix

11.1 Hydraulic diagram

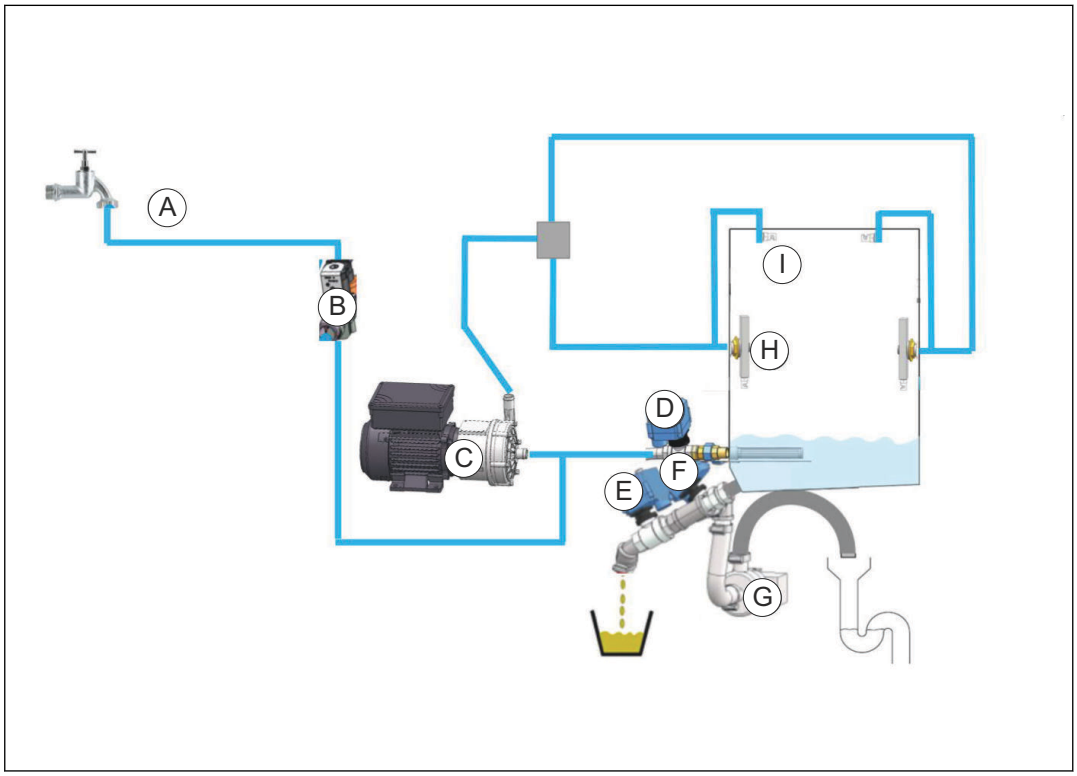

A	Water supply	F	Water drain valve
B	Water valve	G	Drain pump
C	Pump	H	Spray arm (2x)
D	Filter valve	I	Spray nozzle (2x)
E	Grease drain valve		

11.2 Overview of the printed circuit board

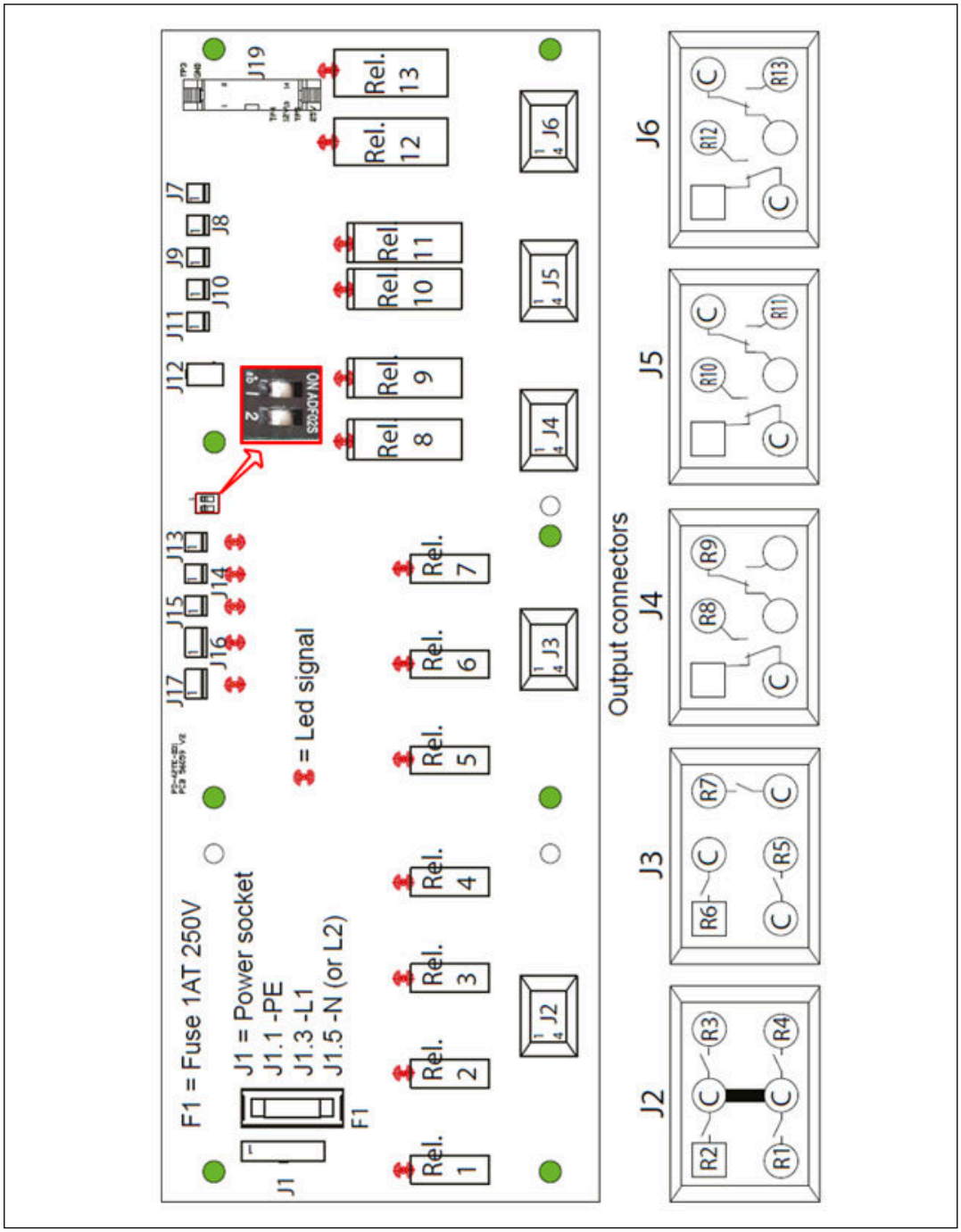

11.3 Circuit diagram

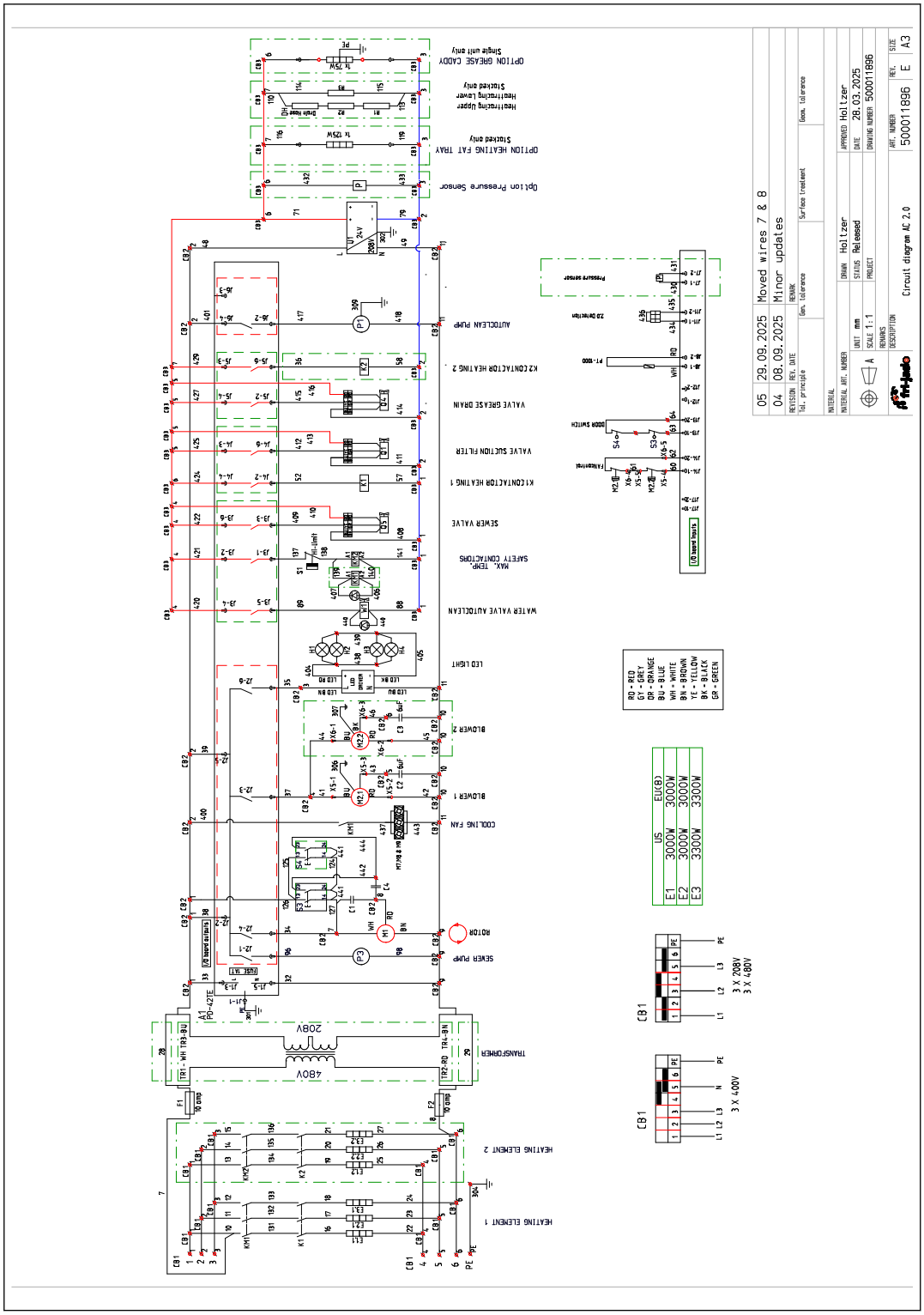

11.4 Wiring diagram

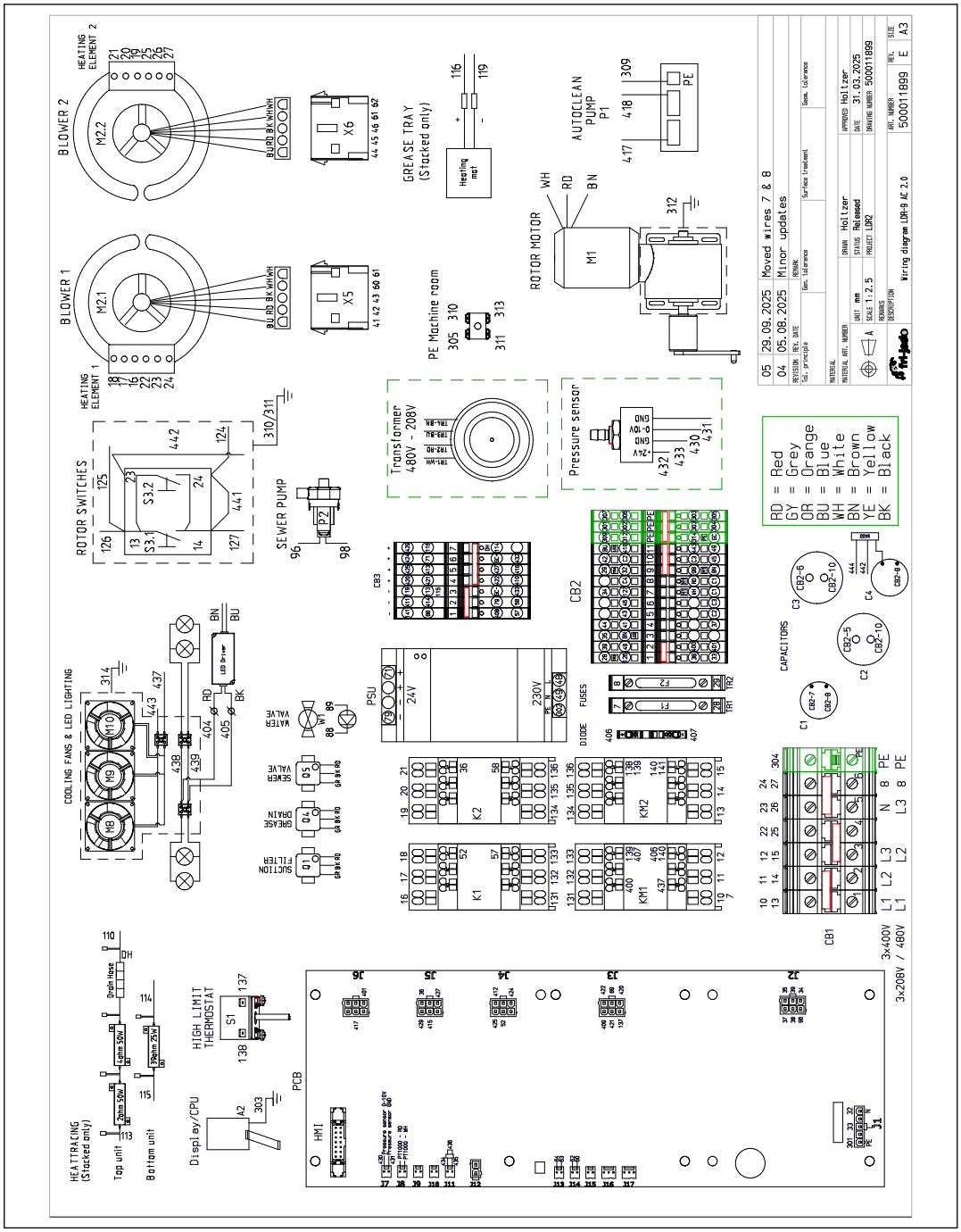

fri-jado