Fri-Jado
Deli Counters

Table Top
Hot Humidified
Full Serve
Square or Curved glass



fri-jado

making food irresistible

Table of content

Features & Benefits 4

DC- 48 - 4/3GN Hot full serve | Square or Curved glass 5
DC- 60 - 4/3GN Hot full serve | Square or Curved glass 7
DC- 72 - 4/3GN Hot full serve | Square or Curved glass 9

Accessories 11

Turn your **food** into **profits**

Designed to provide the best visible product presentation while maintaining food quality for longer, Fri-Jado Deli Counters help you attract customers and increase your sales. All while reducing costs and minimising environmental impact, thanks to innovative technology and design.

Excellent food visibility

Maximum transparency, a slim frame design, mirrored glass doors on the operator side and dual, warm LED lighting offer excellent visibility of your food. This will help you increase your sales. **Because seeing is buying**.

Best food quality for longer

Premium Hot Humidification technology keeps your food to the highest quality for longer. Thanks to multiple fans and specially designed air guides, the hot and humidified air is evenly and very precisely distributed over the food. This helps you **prevent cold spots and minimise product dehydration**.

In addition, radiant heat from above allows you to maintain a higher core temperature. As the top heat can be switched on per section, you can use it only for those products that need a little extra. This is how Fri-Jado deli counters are designed for the **best food quality, longest shelf life and less waste**.

Energy saving technology & design

The efficient airflow of Fri-Jado's Hot Humidification technology consumes less power than standard heating technology. This is because it is accurately guided over the food and evenly distributed across the entire width of the counter. The hot airflow also heats up the humidification tray, eliminating the need for a separate heating element. In addition, the double pane side glass (square model only) and the top glass with Low-E coating offer excellent insulation, minimising heat loss. Now you can **save costs and reduce environmental impact** with lower energy consumption.

Quick & simple use

It doesn't get any easier! Fri-Jado Deli Counters have one control panel for setting the temperature, including simple on/off switches for the humidified airflow, top heat per section and LED lighting. **Maintaining the humidity is effortless too: the water level is always clearly visible, and fresh water can be added directly without having to remove the GN pans**. Anyone can operate this counter in no time at all. Cleaning is easy too. All glass surfaces are easily accessible and the interior parts are removable and dishwasher safe. A design that saves valuable time.

Matches any fresh food concept

The Fri-Jado Deli Counters have a modular design similar to our MCC Hot, Cold and Ambient Food Displays. This means you can create your own perfect setup and combine your deli food offer with food-to-go sales. **Stand out with an eye-catching food sales concept!**

fri-jado

Features & Benefits

Design

Transparent design	Optimal food visibility – seeing is buying!
Gas-spring assisted glass	Opens effortlessly and top window stays securely in place, ensuring safe, hands-free convenience during restocking and cleaning.
Double-glazed sides with transparent spacers - Square model only	Optimal insulation saves energy. Safe to touch surface temperatures and possibility of placing hot and cold display cabinets next to each other without loss of product visibility.
Mirrored glass sliding doors on the operator side	Further improves food visibility by creating a larger visual presentation area.
Flexible and adjustable interior configuration	Can be used with GN pans or optionally with height and angle adjustable flat decks (accessories). For the perfect product presentation.
Angled back side	Improves operator ergonomics
Table top available in different widths	For easy store integration - 48, 60 or 72”
Modular design matching with Fri-Jado’s MCC range of Hot, Cold & Ambient Food Displays.	Create a complete line-up of hot and/or cold food display cabinets in a uniform look and feel, to suit any food sales concept.

Technology

Top glass with Low-E coating	Optimal insulation saves energy. The Low-E coating radiates rising heat back into the unit, minimising heat loss.
Dual warm LED lighting	Supports an eye-catching food presentation. Energy efficient, long operating life.
Hot Humidification Technology. Optimised distribution of hot and humidified air thanks to multiple fans and specially designed air guides	Consistent food temperatures and longer holding times at lower energy consumption. To reduce waste, environmental impact and costs.
Individually controlled radiant heat from above	To fine-tune holding conditions of products from different food groups
“Passive” humidification tray. No heating element or additional energy required to activate it.	Humidification is incorporated in existing technology, which saves energy.

Use

External water reservoir	Easy to monitor and add water without removing pans
Simple control panel	Easy operation
All glass surfaces easily accessible	Easy to clean and good access to the unit
Removable interior parts, dishwasher safe	Easy to clean
Non-exposed heating elements	Safe for operators, easy cleaning

Specifications

DC 48 Hot full serve table top
4/3GN Square or Curved glass

Square glass art.no. 9369600
Curved glass art.no. 9369610



Capacity

Gastronorm capacity	3x 4/3GN
Standard pan frame	3 x 1/1GN + 3 x 1/3GN **OR** 6 x 2/3GN
Max. gastronorm pan depth	4"

Dimensions & weight

Width	47 1/4"
Depth	41 15/16" (square) 43 5/16" (curved)
Height on legs	34 5/8"
Height on stand	55 7/8"
Net weight	353 lbs
Gross weight	452 lbs

Power requirements

Electrical connection	NEMA 15-20P
Power	3,1 kW
Voltage	3N~ 208 V
Frequency	50/60 Hz

DC 48 Hot full serve table top
4/3GN Square or Curved glass

Square glass art.no. 9369600
Curved glass art.no. 9369610

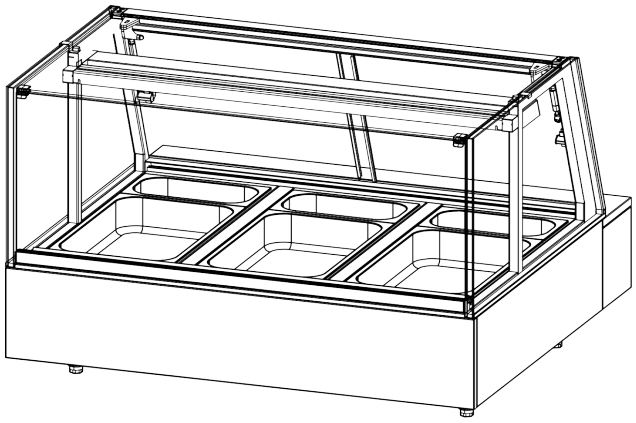

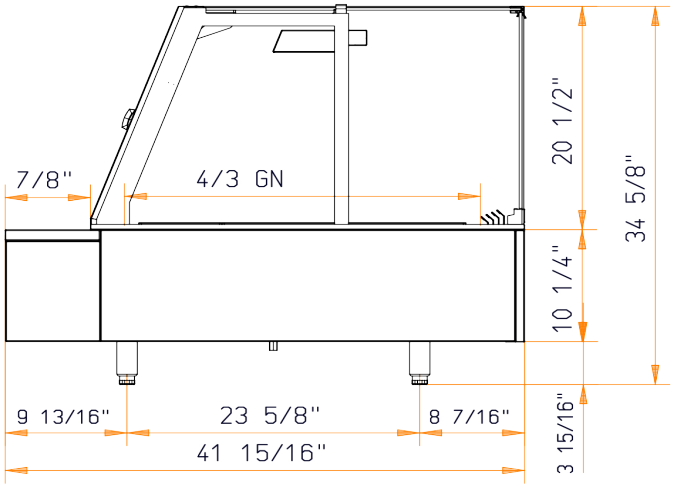

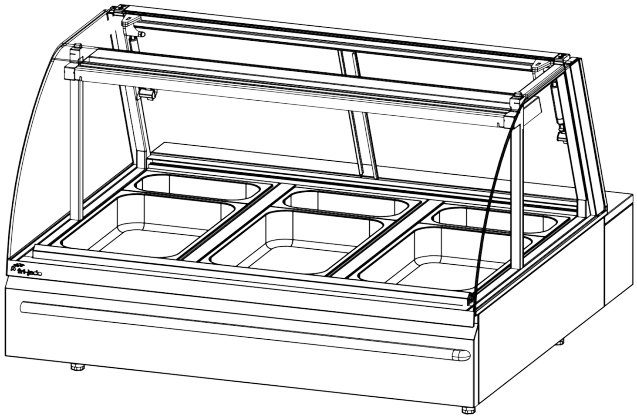

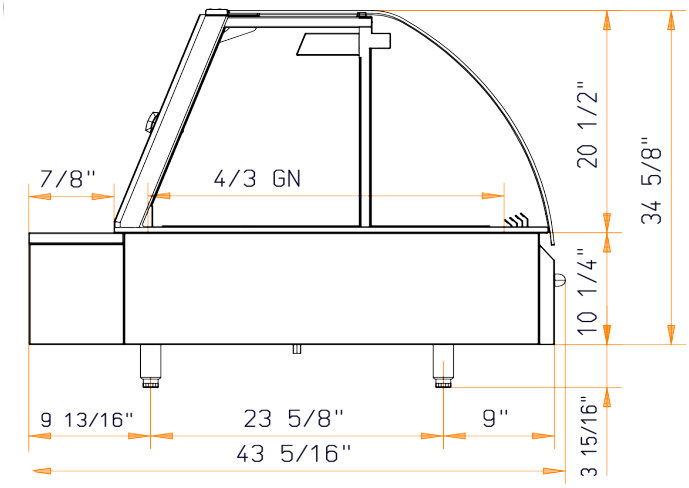

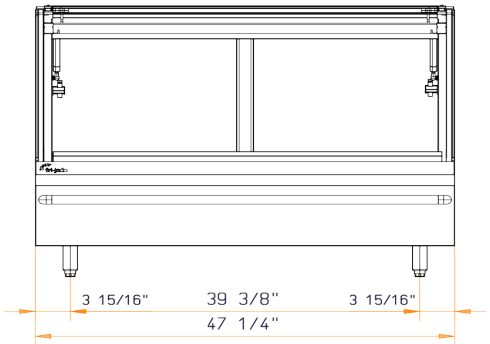

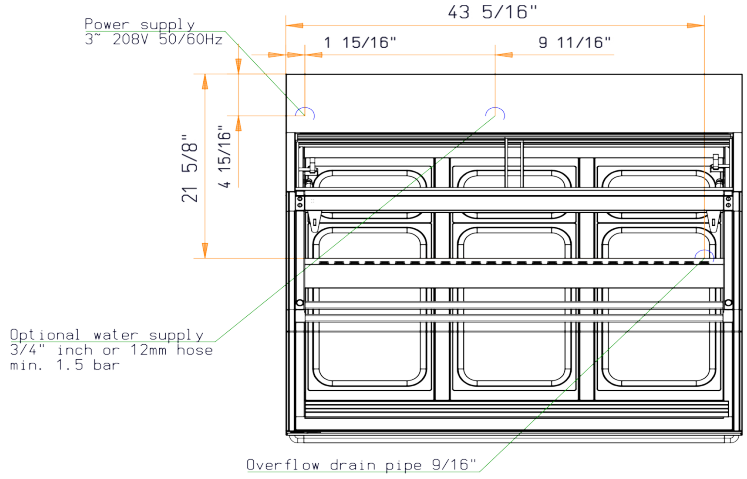

DC 60 Hot full serve table top
4/3GN Square or Curved glass

Square glass art.no. 9369601
Curved glass art.no. 9369611



Capacity

Gastronorm capacity	4 x 4/3 GN
Standard pan frame	4 x 1/1GN + 4 x 1/3GN **OR** 8 x 2/3GN
Max. gastronorm pan depth	4"

Dimensions & weight

Width	59 1/16"
Depth	41 15/16" (square) 43 5/16" (curved)
Height on legs	34 5/8"
Height on stand	55 7/8"
Net weight	419 lbs
Gross weight	538 lbs

Power requirements

Electrical connection	NEMA 15-20P
Power	3,9 kW
Voltage	3N~ 208 V
Frequency	50/60 Hz

DC 60 Hot full serve table top
4/3GN Square or Curved glass

Square glass art.no. 9369601
Curved glass art.no. 9369611

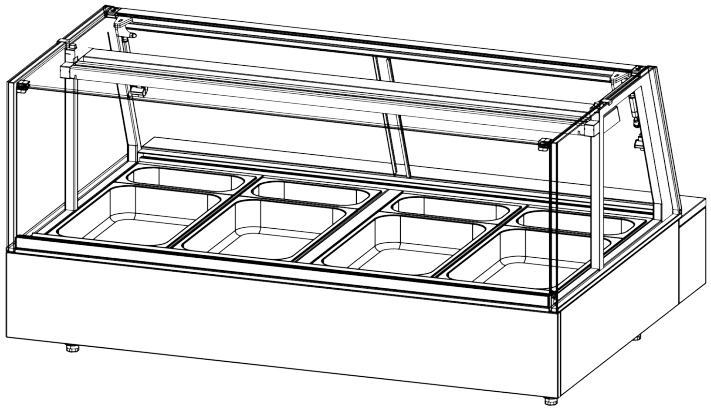

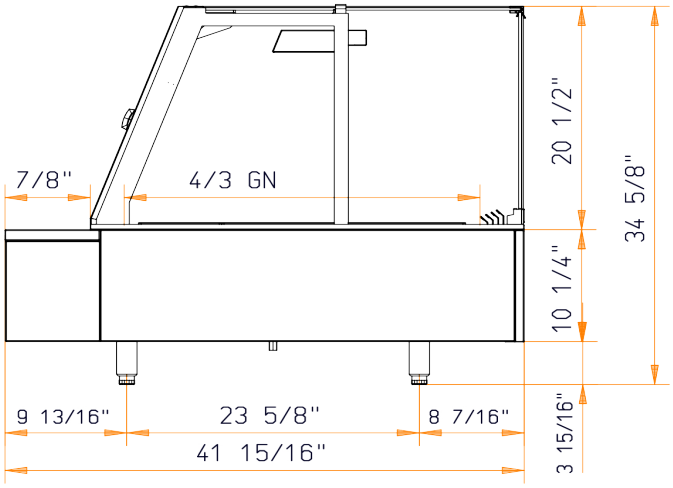

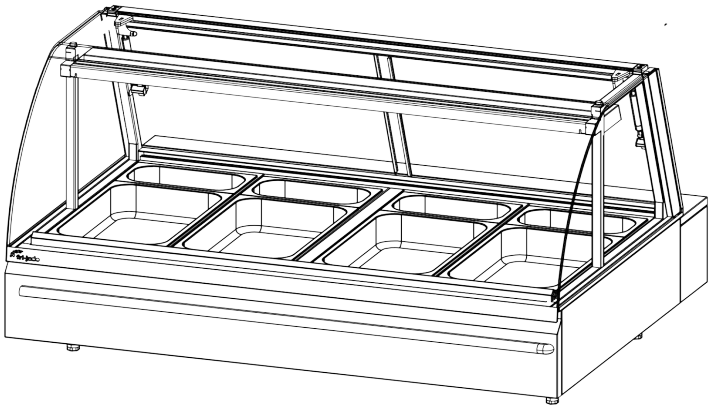

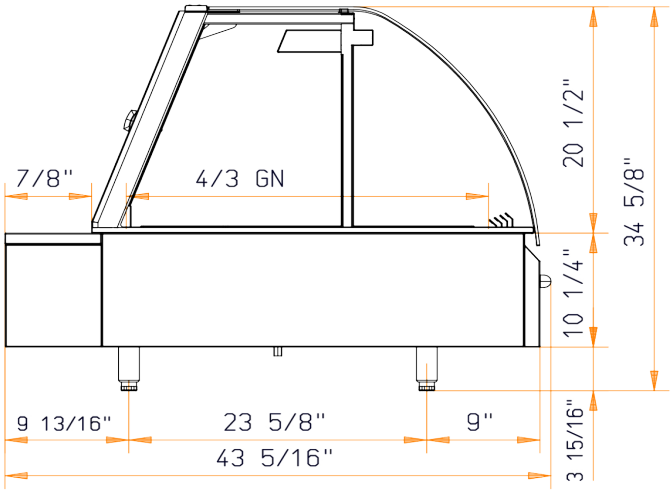

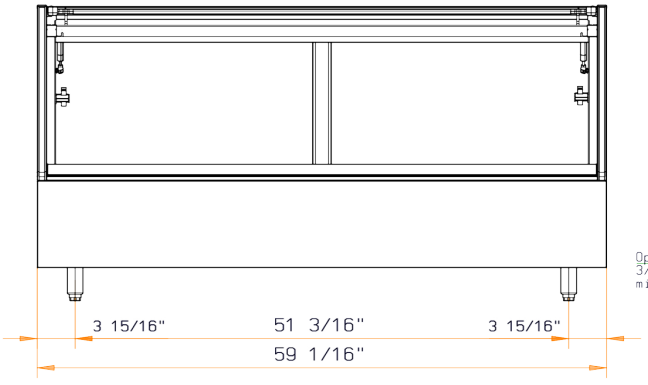

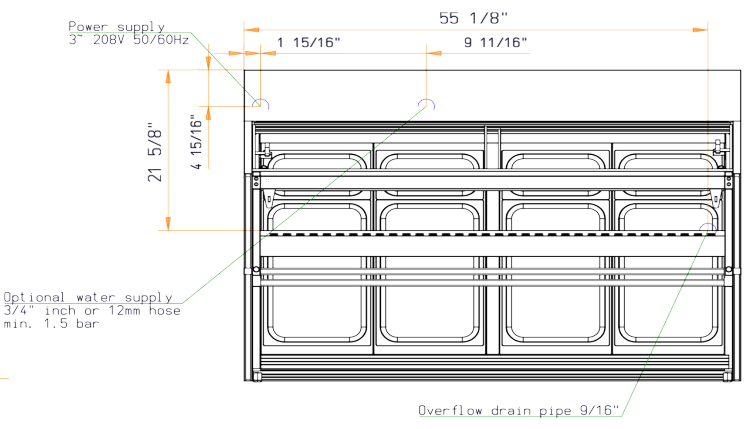

DC 72 Hot full serve table top
4/3GN Square or Curved glass

Square glass art.no. 9369602
Curved glass art.no. 9369612



Capacity

Gastronorm capacity	5 x 4/3 GN
Standard pan frame	5 x 1/1GN + 5 x 1/3GN **OR** 10 x 2/3GN
Max. Gastronorm pan depth	4"

Dimensions & weight

Width	70 7/8"
Depth	41 15/16" (square) 43 5/16" (curved)
Height on legs	34 5/8"
Height on stand	55 7/8"
Net weight	485 lbs
Gross weight	624 lbs

Power requirements

Electrical connection	NEMA 15-20P
Power	4,7 kW
Voltage	3N~ 208 V
Frequency	50/60 Hz

DC 72 Hot full serve table top
4/3GN Square or Curved glass

Square glass art.no. 9369602
Curved glass art.no. 9369612

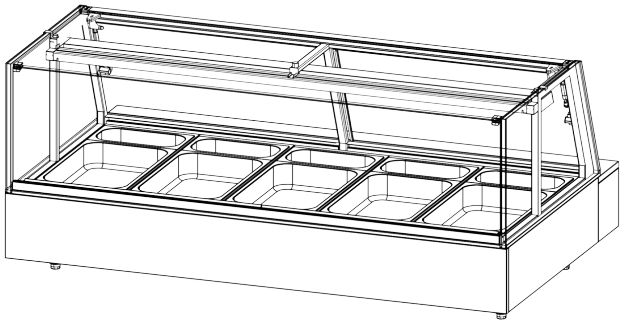

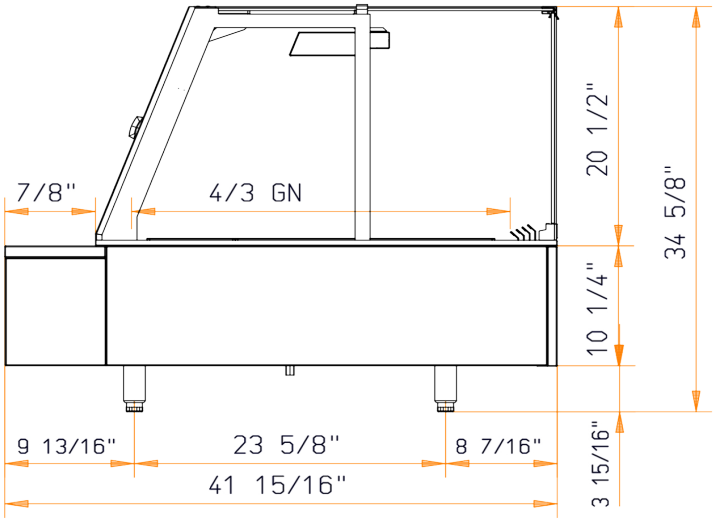

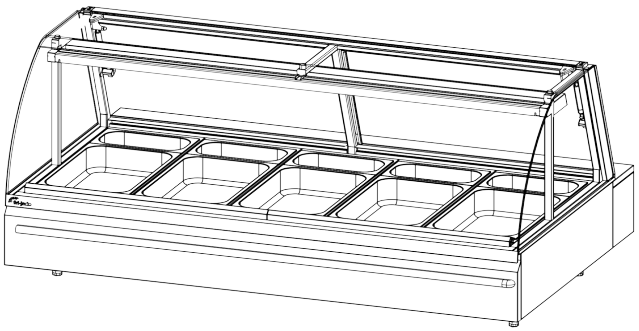

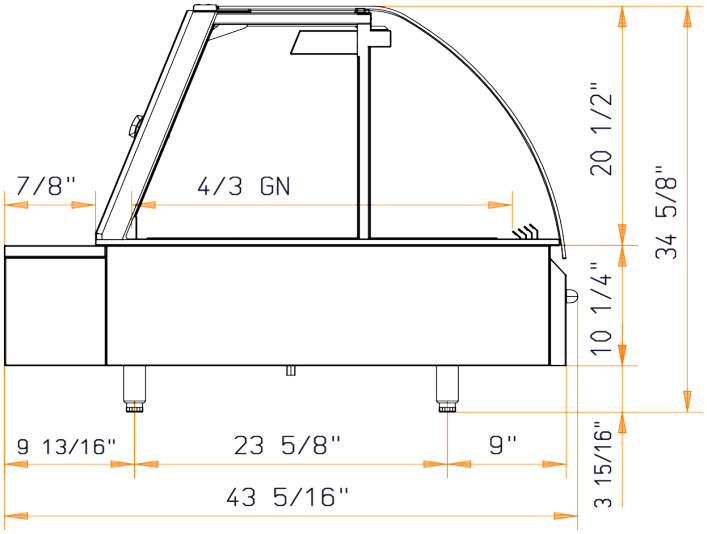

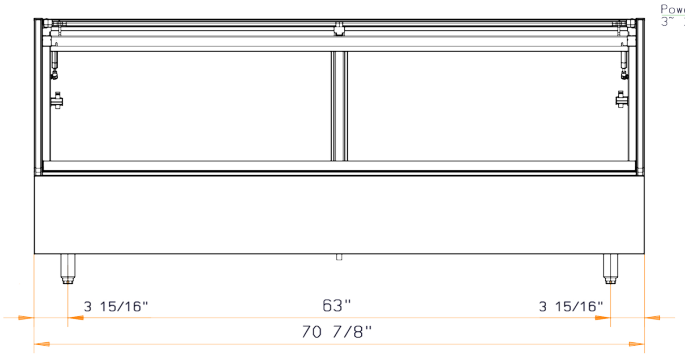

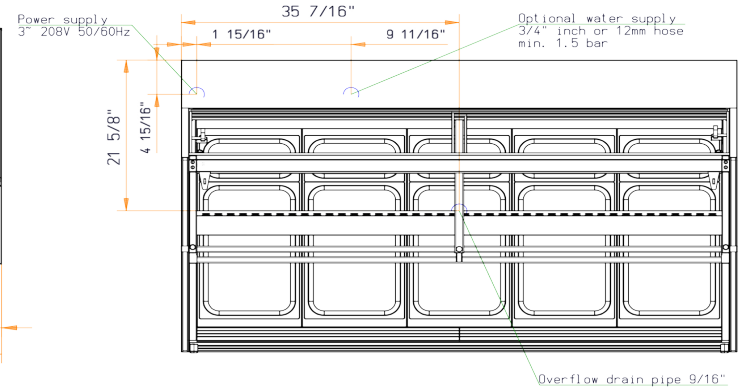

Accessories



Short pan frame divider
To create additional (horizontal) GN sections.

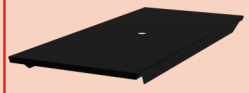

Flat deck (black)
Can be used instead of the GN pan frames. Requirement for full replacement: DC 48: 3 pcs, DC 60: 4 pcs, DC 72: 5 pcs.



Vertical spacer (black)
To be used with the flat decks. DC 48: 2 pcs, DC 60: 1 pc, DC 72: 0 pcs.

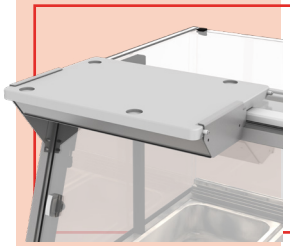

Scale stand
Designed to be mounted on top of the counter.

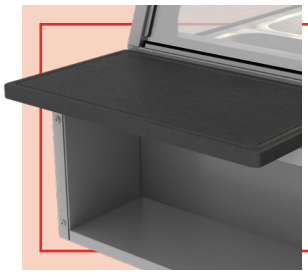

Cutting board (black)
Can be fixed on worktop. Available in two sizes.

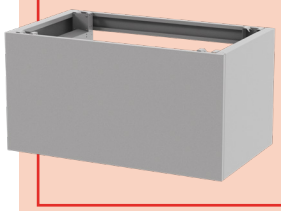

Underframe
Turn the table top into a counter on underframe. Available in 3 sizes.

Accessories DC 48/60/72 Hot full serve 4/3GN	
Description	**Art. No.**
Short pan frame divider	9369800
Flat deck (black)	9369801
Vertical spacer (black)	9369806
Scale stand	9369820
Cutting board (black) 17.75 × 10.5”	9369809
Cutting board (black) 23.50 × 10.5”	9369810
Underframe 48”	9369817
Underframe 60”	9369818
Underframe 72”	9369819

Specifications and technical data are subject to amendment without prior notice.
This spec sheet contains basic drawings. For more detailed technical information, please visit www.frijado.com. Whilst every care has been taken in the compilation of this spec sheet, and every attempt to present up-to-date and accurate information, we cannot guarantee that inaccuracies will not occur. Fri-Jado can not be held responsible for any loss, damage or inconvience caused as a result of any inaccurancy or error on this spec sheet.